ENGINEERING
TOMORROW

**Data sheet**

# Electrical rotary actuators AMB 162, AMB 182

## Description



**Main Data:**
- Nominal voltage
  - 2 and 3 point:
    230 V AC, 50/60 Hz
    24 V AC, 50/60 Hz;
  - modulating:
    24V AC/DC;
- Output torque 5, 10 and 15 Nm;
- Rotation angle 90°;
- Actuator running speed
  - variants: 15/30/60/90/120/240/480 sec. per 90°
- Control signal:
  - 2-point,
  - 3-point,
  - modulating (0(2)-10 V and 0(4)-20 mA).

**Features:**
- Additional AUXILIARY switch;
- Indication of actual valve position;
- LED indication of turning direction;
- Manual valve turning mode enabled by a permanent clutch;
- No damage in case of valve blocking;
- Silent and reliable operation;
- Maintenance free;
- Selectable speed on DIP switch (modulating actuator only);
- LED indication of activatied AUXILIARY switch (2&3-point controled actuators only).

Actuators AMB are intended to control rotating mixing and diverting valves.

AMB 162 and AMB 182 actuators are used for temperature control in central heating systems together with 3-way and 4-way rotary valves of the types HRB, HRE and HFE.

## Ordering

| Type | Torque (Nm) | Control signal | Speed (s/90°) | Supply voltage (V) | Remark | For RVA DN | Code No. |
|---|---|---|---|---|---|---|---|
| AMB 162 | 5 | 2-point | 15 | 24 | - | 15-50 | **082H0270** |
| | | | | 230 | - | | **082H0271** |
| | | | | 24 | AS* | | **082H0272** |
| | | | | 230 | | | **082H0273** |
| | | 3-point | 15 | 24 | - | | **082H0210** |
| | | | 30 | | | | **082H0211** |
| | | | 60 | | | | **082H0212** |
| | | | 120 | | | | **082H0213** |
| | | | 480 | | | | **082H0214** |
| | | | 15 | | AS* | | **082H0215** |
| | | | 30 | | | | **082H0216** |
| | | | 60 | | | | **082H0217** |
| | | | 120 | | | | **082H0218** |
| | | | 480 | | | | **082H0219** |
| | | | 15 | 230 | - | | **082H0220** |
| | | | 30 | | | | **082H0221** |
| | | | 60 | | | | **082H0222** |
| | | | 120 | | | | **082H0223** |
| | | | 480 | | | | **082H0224** |
| | | | 15 | | AS* | | **082H0225** |
| | | | 30 | | | | **082H0226** |
| | | | 60 | | | | **082H0227** |
| | | | 120 | | | | **082H0228** |
| | | | 480 | | | | **082H0229** |
| | | mod | 60/90/120 | 24 | - | | **082H0230** |

** actuator with build in aux switch*

© Danfoss | 2019.12

## Ordering *(continuous)*

| Type | Torque (Nm) | Control signal | Speed (s/90°) | Supply voltage (V) | Remark | For RVA DN | Code No. |
|---|---|---|---|---|---|---|---|
| AMB 182 | 15 | 2-point | 60 | 24 | - | 15-150 | **082H0274** |
| | | | | 230 | | | **082H0275** |
| | | | | 24 | AS* | | **082H0276** |
| | | | | 230 | | | **082H0277** |
| | 10 | 3-point | | 24 | - | 15-100 | **082H0231** |
| | | | | 230 | | | **082H0232** |
| | 15 | | | 24 | | 15-150 | **082H0233** |
| | | | 240 | | | | **082H0234** |
| | | | 60 | | AS* | | **082H0235** |
| | | | 240 | | | | **082H0236** |
| | | | 60 | 230 | - | | **082H0237** |
| | | | 240 | | | | **082H0238** |
| | | | 60 | | AS* | | **082H0239** |
| | | | 240 | | | | **082H0240** |
| | | mod | 60/90/120 | 24 | - | 15-150 | **082H0241** |

** actuator with build in aux switch*

### AMB linkage kits

| Description | Code No. |
|---|---|
| for Danfoss HFE, ESBE (old type), Seltron, Somatherm, Hora, WIP, PAW, Acaso, BRV, IMIT, IMP, IVAR | **082H0250** |
| for Centra - Type DR/ZR | **082H0251** |
| for Centra - Type DRU | |
| for Meibes, Wita | **082H0252** |
| for Honeywell - Type V5442.., Type V5433.. | **082H0253** |
| for old Danfoss RVA, Esbe VRG | **082H0254** |
| for Danfoss HRB, HRE | **082H0255** |

## Technical data

| | | | |
|---|---|---|---|
| Power supply | 2-point | V | 24 AC or 230 AC; ±10% |
| | 3-point | | |
| | modulating | | 24 AC/DC; ±10% |
| Power consumption | | VA | AMB 162: 2.5 |
| | | | AMB 182: 3.5 |
| Frequency | | Hz | 50/60 |
| Running speed | 2-point | sec/90° | 15/60 |
| | 3-point | | 15/30/60/120/240/480 |
| | modulating | | 60/90/120* |
| Control input | | | 2&3-point<br>modulating (0(2)-10 V and 0(4)-20 mA) |
| Operating torque | | Nm | 5, 10 or 15 |
| Rotation angle | | | 90° |
| Auxiliary switch | | | adjustable 0-90° (only 2 and 3 point actuators) |
| Max. medium temperature | | °C | 110 |
| Ambient temperature | | | 0 … 50 |
| Storage and transport temperature | | | –10 … 80 |
| Protection Class | 24 V | | III according to EN 60730-1 |
| | 230 V | | II according to EN 60730-1 |
| Grade of enclosure | | | IP42 according to EN 60529 |
| Wire lenght | | m | 2 |
| Weight | | g | 300 |
| Color / material | | | dark grey/PC |
| CE - marking in accordance with standards | | | Restriction of Hazardous Substances Directive (RoHS2) 2011/65/EU<br>Low Voltage Directive (LVD) 2014/35/EU<br>Electromagnetic Compatibility Directive (EMC) 2014/30/EU |

** selectable on DIP switch*


© Danfoss | 2019.12

## Application principle

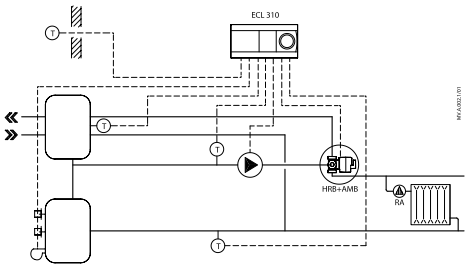


*Boiler system with ECL electronic controller and HRB rotary valve.*

*HRB 4*

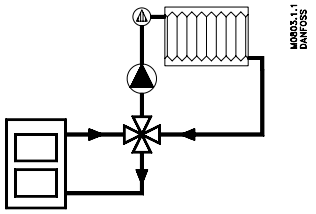


*The reverse function is obtained by turning the actuator's direction of rotation and the valve's sign.*

*HRB 3*

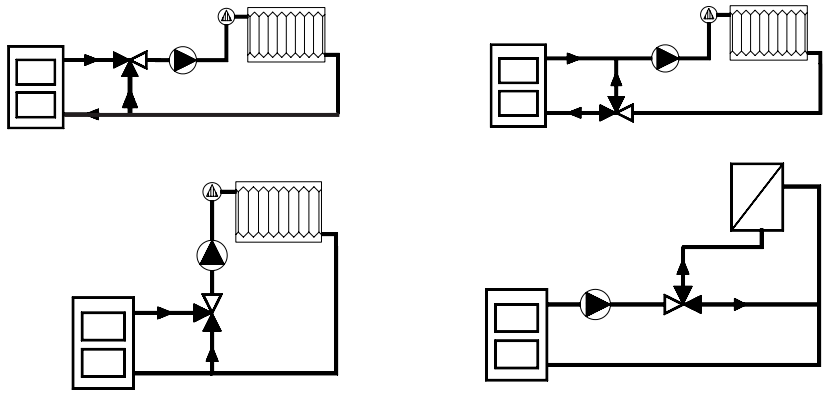

*The reverse function is obtained by turning the actuator's direction of rotation and the valve's sign.*

## Installation procedure

1. Rotary valve
2. Anti-rotation spacer
3. Valve adapter
4. Actuator
5. Manual operating clutch
6. Position indicator
7. Handle
8. Fixing screw

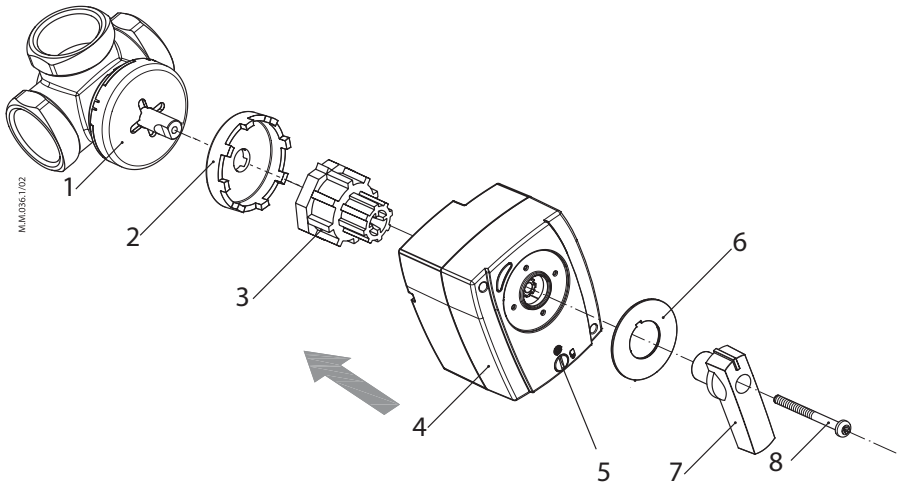

## Installation

The actuator can be mounted directly to the rotary valve.

Rotating angle is limited to 90° and when the actuator reaches the limit, the voltage supply to the actuator is disconnected.

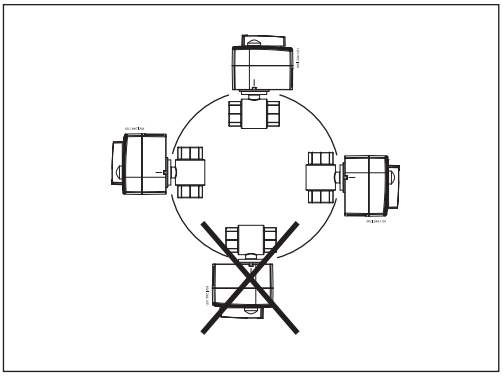

## Hydraulic installation

*Recommended installation of the eletric actuated valve*

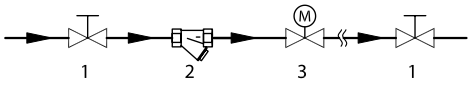


1. Ball valve
2. Strainer
3. AMB

## Manual override

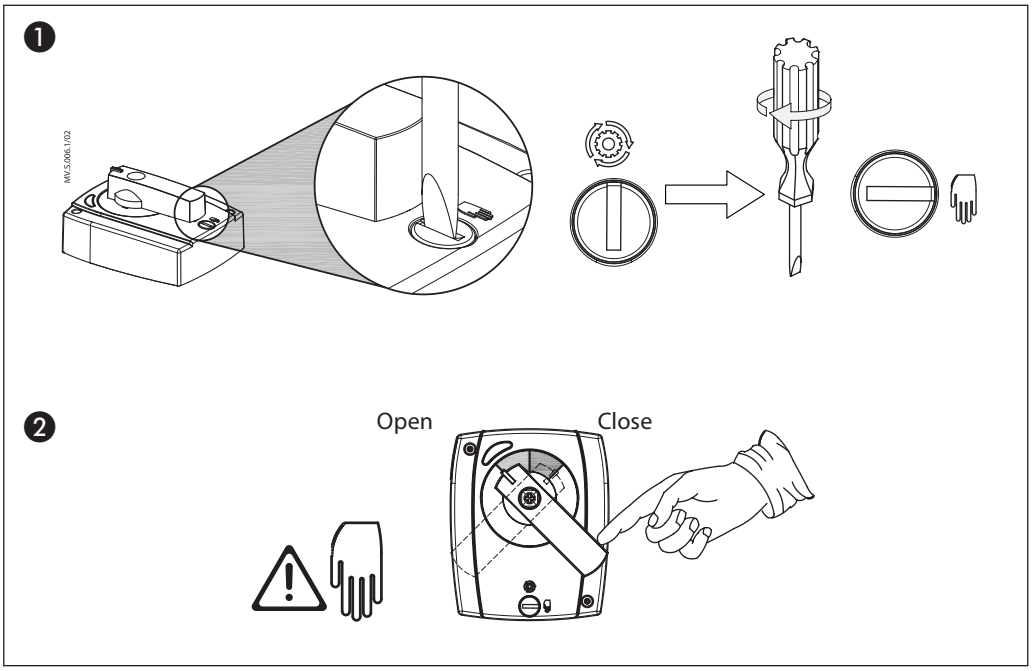



© Danfoss | 2019.12

## LED signalling

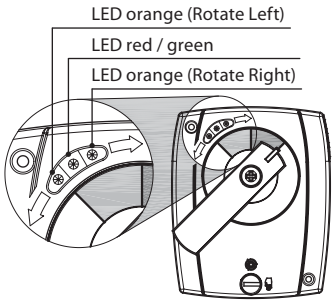


AMB 162/182

| LED color | 2-point | 3-point | Modulating |
|---|---|---|---|
| orange | Rotation Left / Right | | |
| green | - | - | Status OK |
| red | AUX switch activation | AUX switch activation | - |

## Wiring

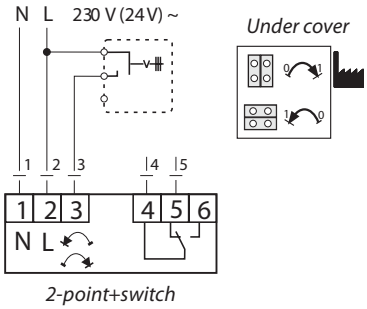


*2-point+switch*

Direct/Inverse function

| Jumper | Wiring | Rotation |
|---|---|---|
| DIR | L = 2 | Left |
| | L = 2 & 3 | Right |
| INV | L = 2 | Right |
| | L = 2 & 3 | Left |

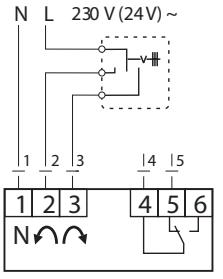


*3-point/3-point+switch*

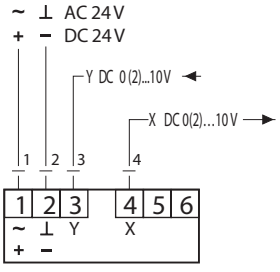


*Modulating*

2/3-point + switch

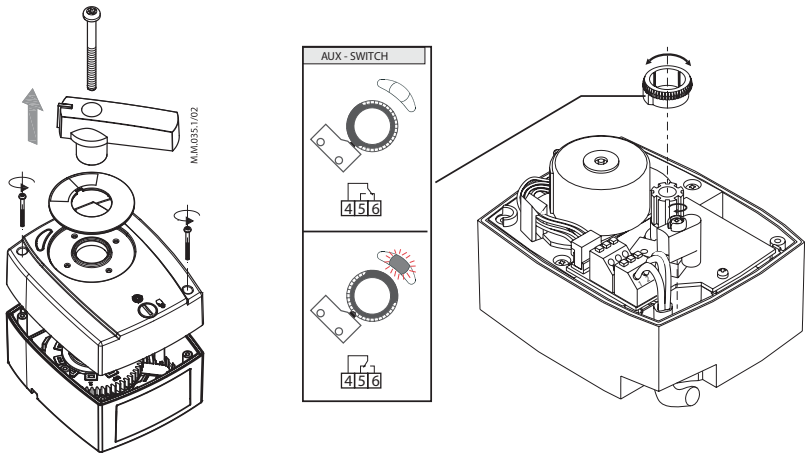

## DIP switch setting
*(modulating actuators only)*

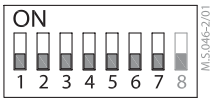


| S1 | S2 | SIG. |
|---|---|---|
| 0 | 0 | U |
| 1 | 1 | I |

| S3 | U/I |
|---|---|
| 0 | 0-10 V/0-20 mA |
| 1 | 2-10 V/4-20 mA |

| S4 | ↻ |
|---|---|
| 0 | ↻ |
| 1 | ↺ |

| S5 | S6 | ◷ |
|---|---|---|
| 0 | 0 | 60 s |
| 0 | 1 | 90 s |
| 1 | 0 | 120 s |
| 1 | 1 | 120 s |

| S7 | Valve blockage |
|---|---|
| 0 | - |
| 1 | ☼ |

**S4:**

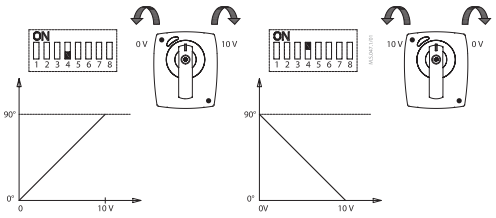


**S3:**

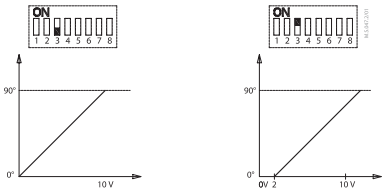


**S7:**

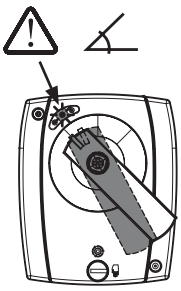

## Dimensions

with handle

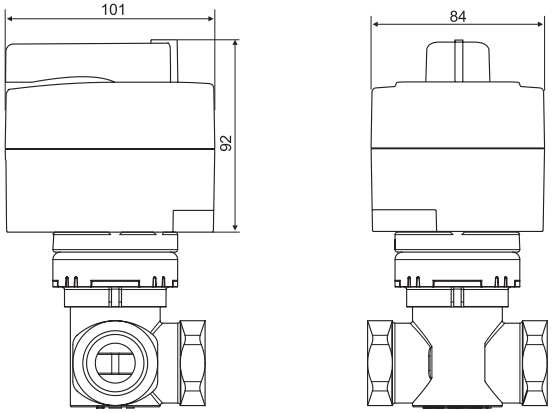


without handle

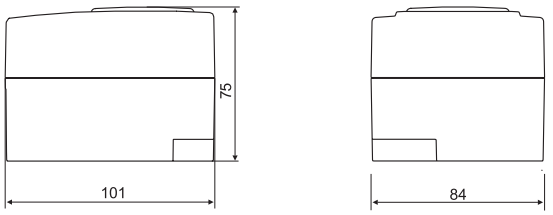



© Danfoss | 2019.12

**Danfoss A/S**
Heating Segment • heating.danfoss.com • +45 7488 2222 • E-Mail: heating@danfoss.com

Danfoss can accept no responsibility for possible errors in catalogues, brochures and other printed material. Danfoss reserves the right to alter its products without notice. This also applies to products already on order provided that such alterations can be made without subsequential changes being necessary in specifications already agreed.
All trademarks in this material are property of the respective companies. Danfoss and all Danfoss logotypes are trademarks of Danfoss A/S. All rights reserved.



© Danfoss | DHS-SRMT/SI | 2019.12