Brand	hansgrohe
Art. Name	**Croma Select E** Hand shower 110 Vario EcoSmart
Art. Nr.	26813400
Surface	White/Chrome

Product picture



Drawing

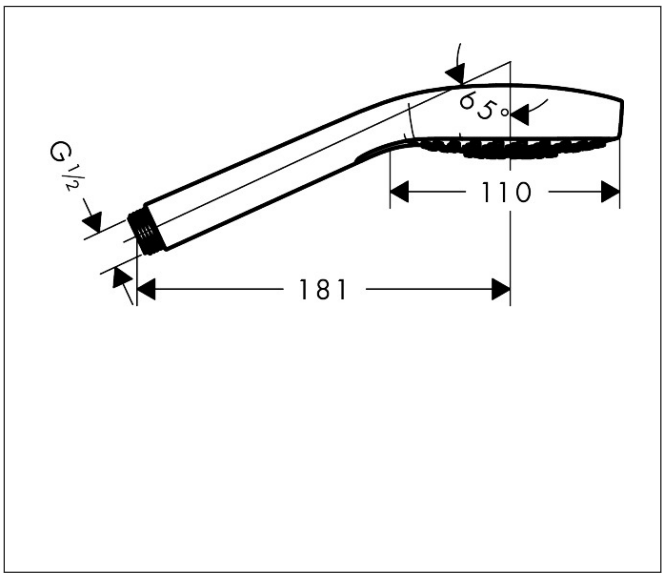

Features

- shower head size: 110 mm
- spray type: Rain, TurboRain, IntenseRain
- convenient spray selection via Select button
- spray disc surface: easy cleanable plastic spray disc, white
- QuickClean: limescale deposits can simply be rubbed off with your finger
- flow rate Rain spray at 3 bar: 7,8 l/min
- function from: 5,5 l/min
- maximum flow rate at 3 bar: 8 l/min
- minimum flow pressure: 1,2 bar
- with internal water supply
- rinseable dirt filter
- connection thread: G ½
- suitable for continous flow water heaters
- EU taxonomy: max. 8 l/min - Do No Significant Harm (DNSH)

Technology



Spray Types



Brand	hansgrohe
Art. Name	**Croma Select E** Hand shower 110 Vario EcoSmart
Art. Nr.	26813400
Surface	White/Chrome

Flow chart

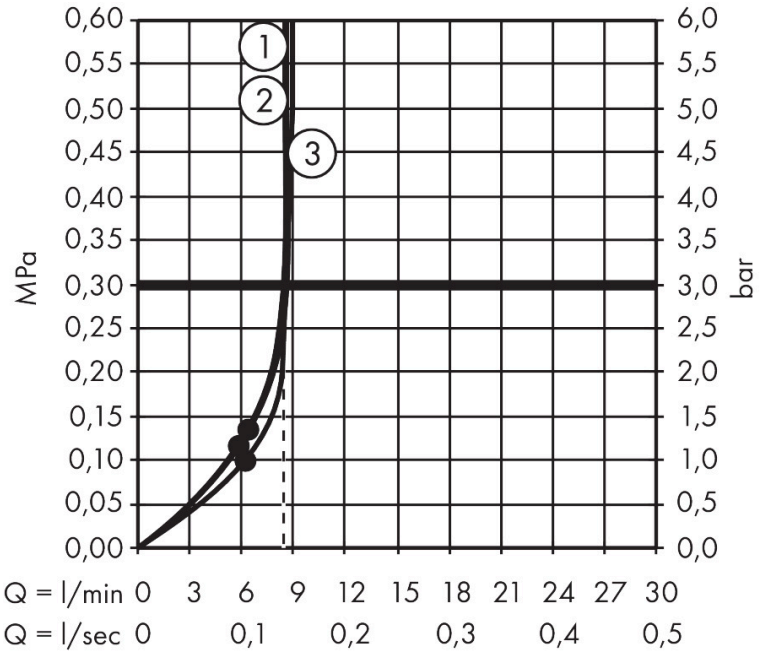

1 Rain
2 TurboRain
3 IntenseRain
4 Rain + Booster

The consumption was measured in combination with the appropriate fittings (thermostat/mixer/in-wall valve) to reflect actual application in practice.

Brand	hansgrohe
Art. Name	**Croma Select E** Hand shower 110 Vario EcoSmart
Art. Nr.	26813400
Surface	White/Chrome

Spare Parts Drawing for build year: 07/15 - 05/19

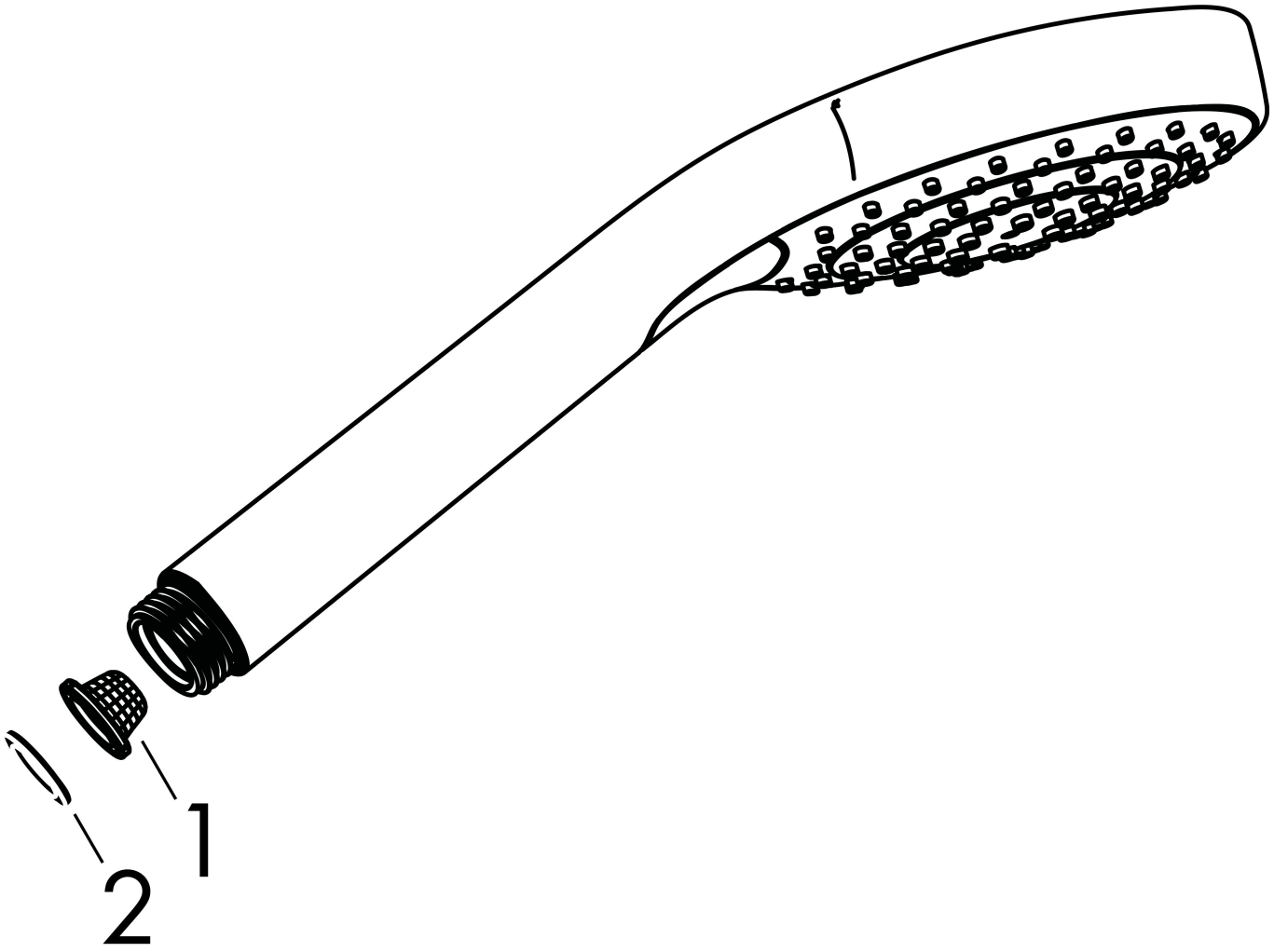

Brand	hansgrohe
Art. Name	**Croma Select E** Hand shower 110 Vario EcoSmart
Art. Nr.	26813400
Surface	White/Chrome

Spare parts list for build year: 07/15 - 05/19

Pos.	Description	Articlenumber
1	filter	92672000
2	seal	98058000