Brand	hansgrohe
Art. Name	**Vernis Shape** 4-hole rim mounted bath mixer
Art. Nr.	71459000
Surface	Chrome

Product picture



Drawing

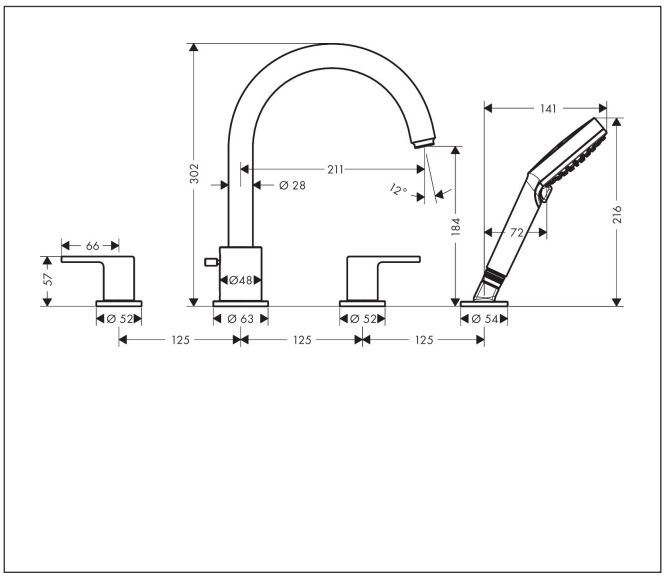

Features

- consists of: 4-hole rim mounted bath mixer, hand shower
- 2 functions
- projection: 211 mm
- handle variant: lever handle
- spray type hand shower: Rain, IntenseRain
- maximum pull-out length of hand shower: 1,6 m
- maximum flow rate at 3 bar: 25 l/min
- flow rate for bath spout at 3 bar: 25 l/min
- maximum flow rate of hand shower at 3 bar: 17 l/min
- ceramic valves hot/cold 90°
- non-return valve
- suitable for continous flow water heaters
- connection dimension: DN15
- connection type: G ½
- installation on bath rim
- min. operating pressure: 1 bar
- max. operating pressure: 10 bar
- additional maintenance opening required

Technology



Spray Types



Brand	hansgrohe
Art. Name	**Vernis Shape** 4-hole rim mounted bath mixer
Art. Nr.	71459000
Surface	Chrome

Flow chart

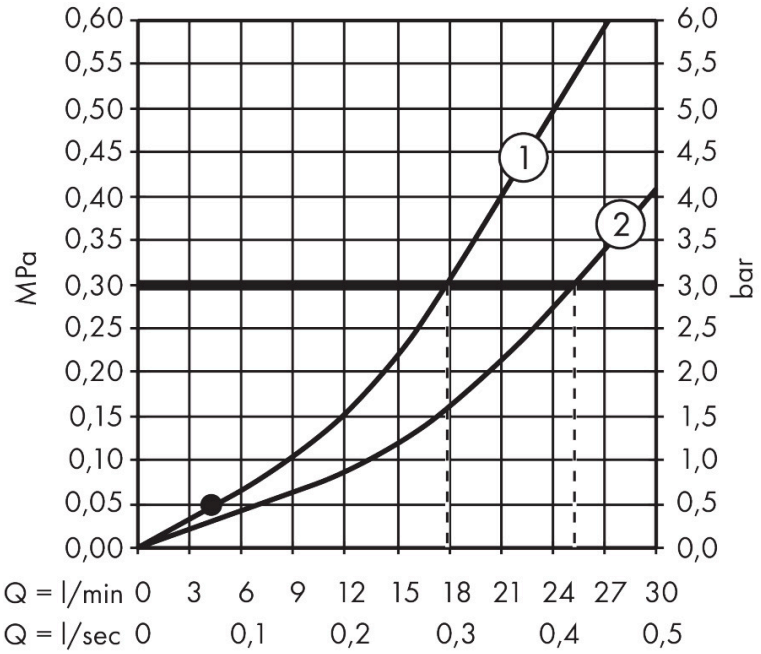

1 Hand shower
2 Bath spout