Saunier Duval

0010045533

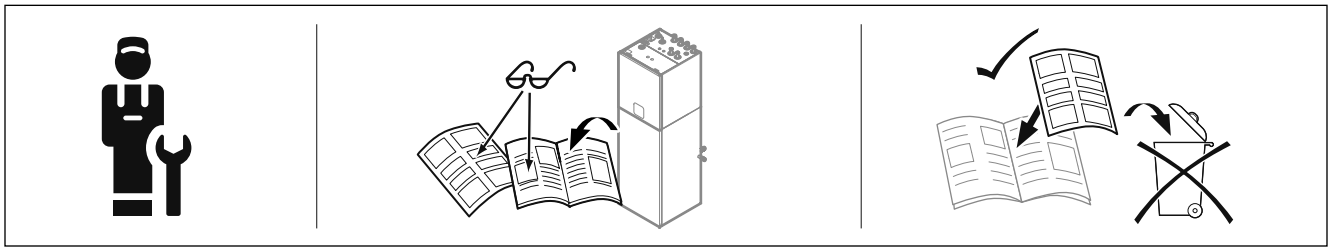

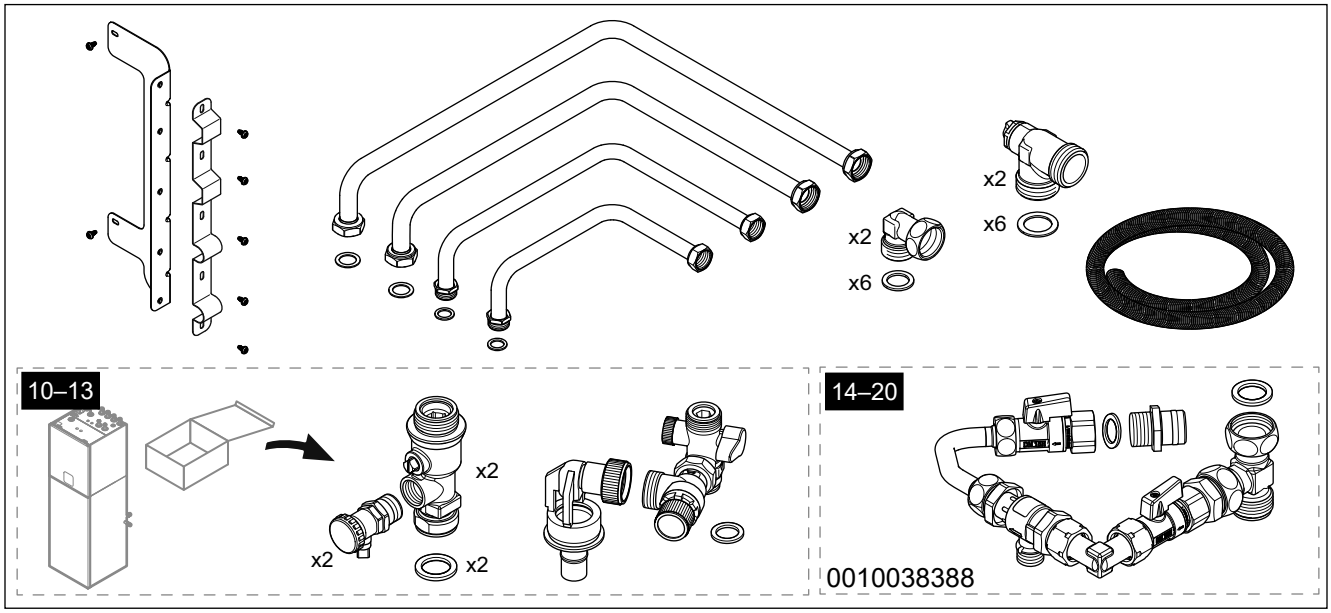

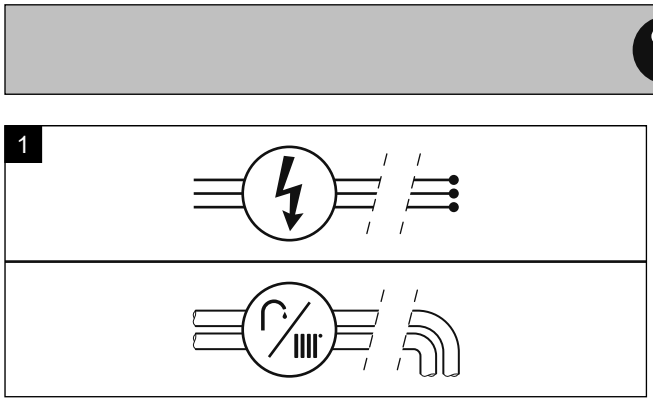

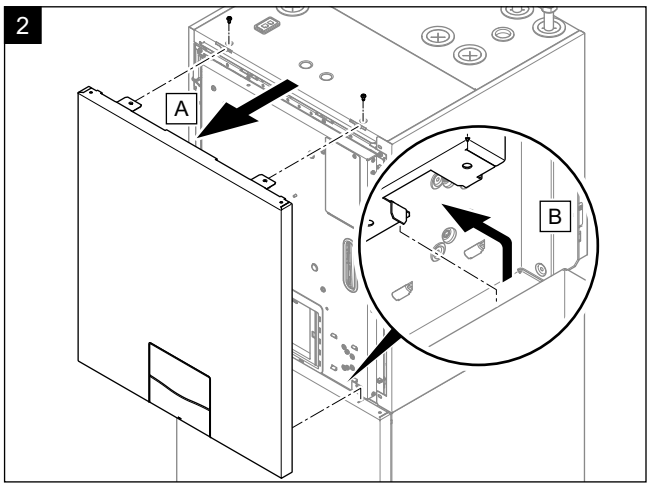

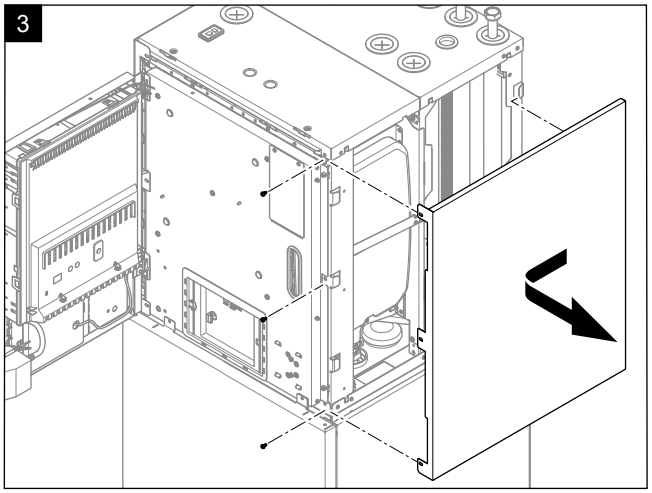
3

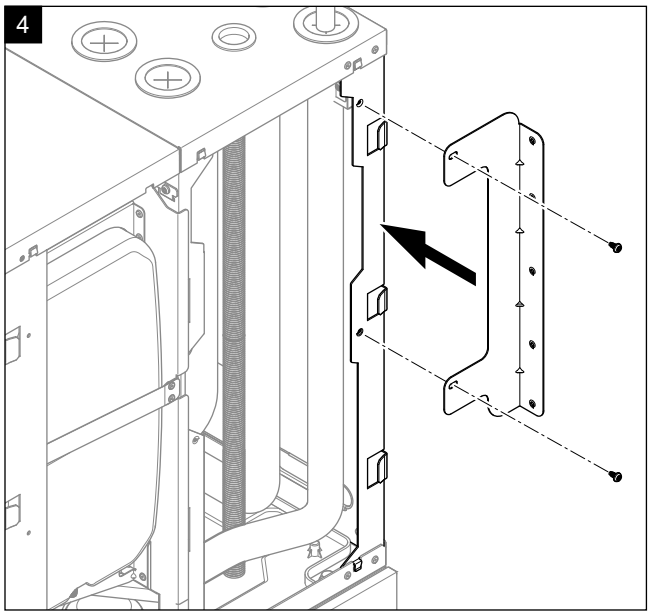
4

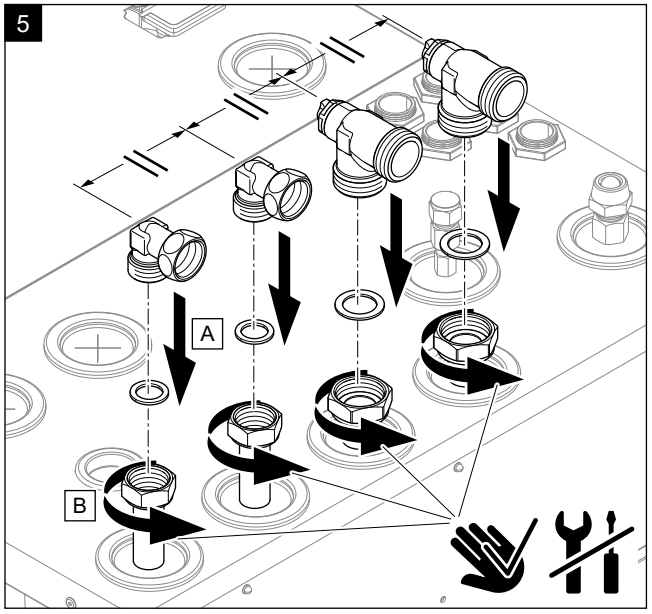
5
A
B

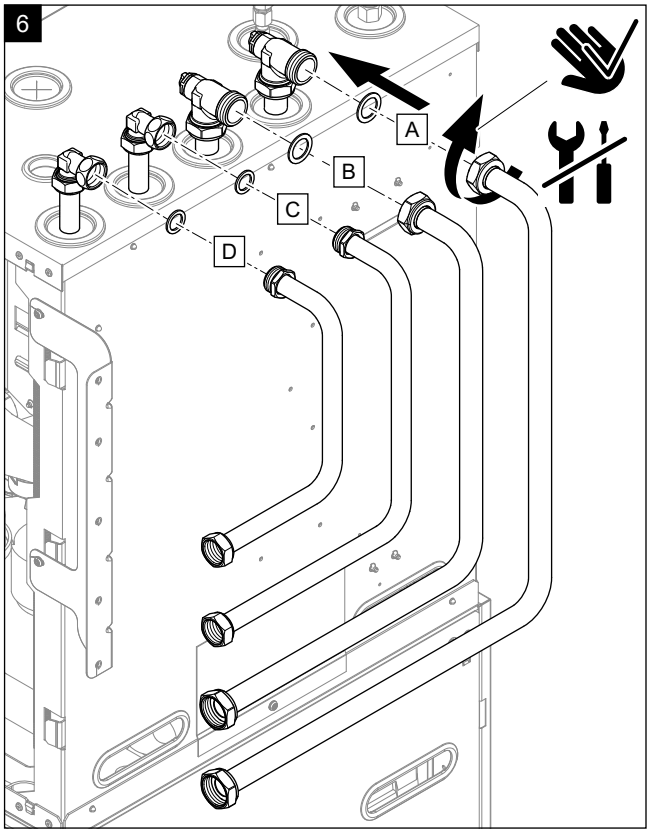
6
A
B
C
D

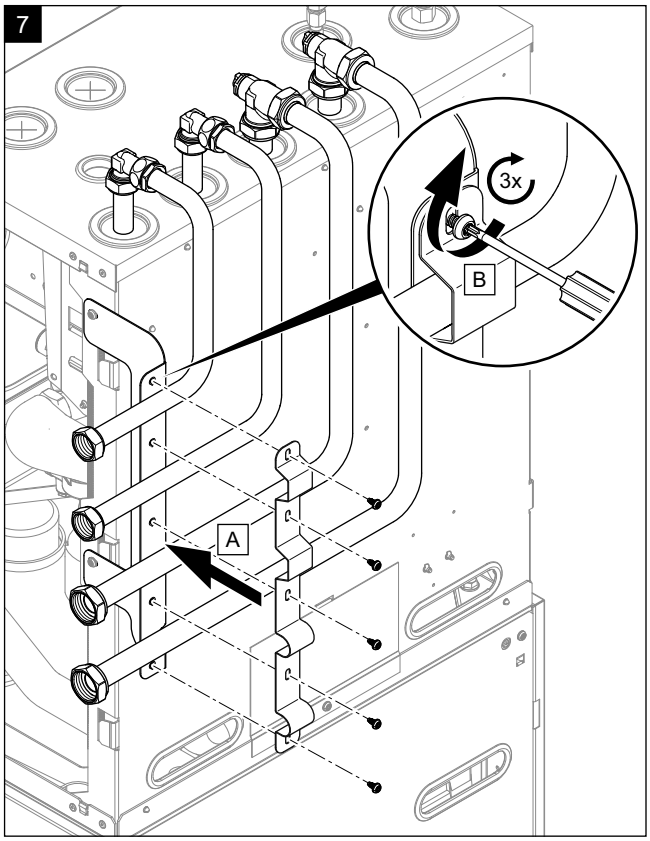
7
3x
B
A

8

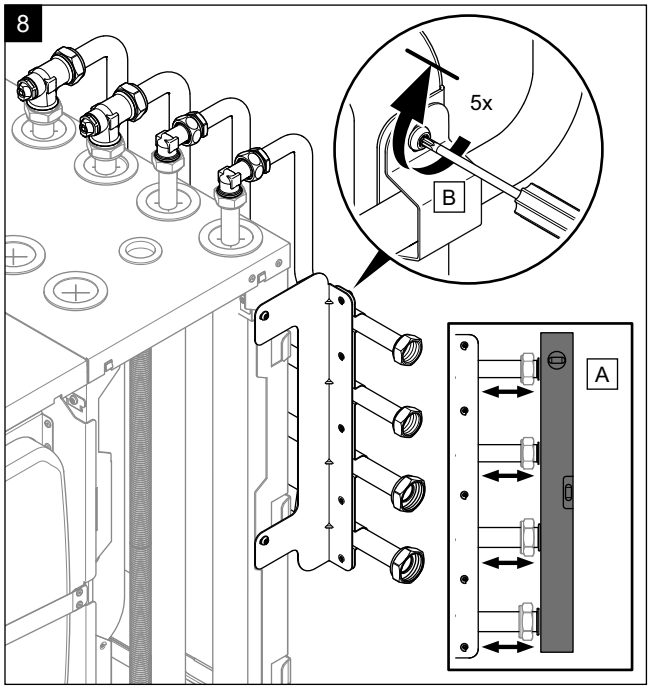

9

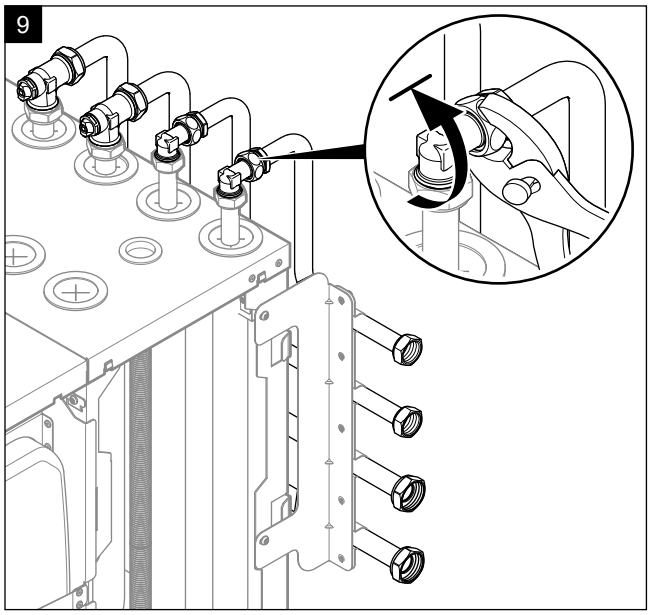

10

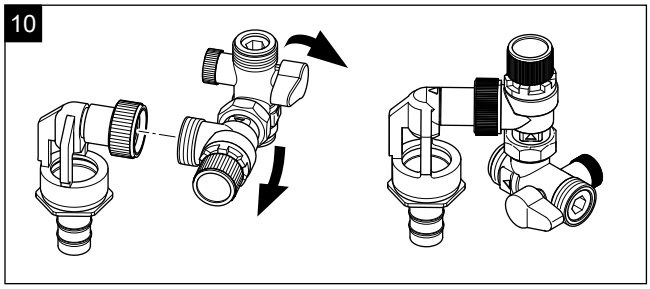

11

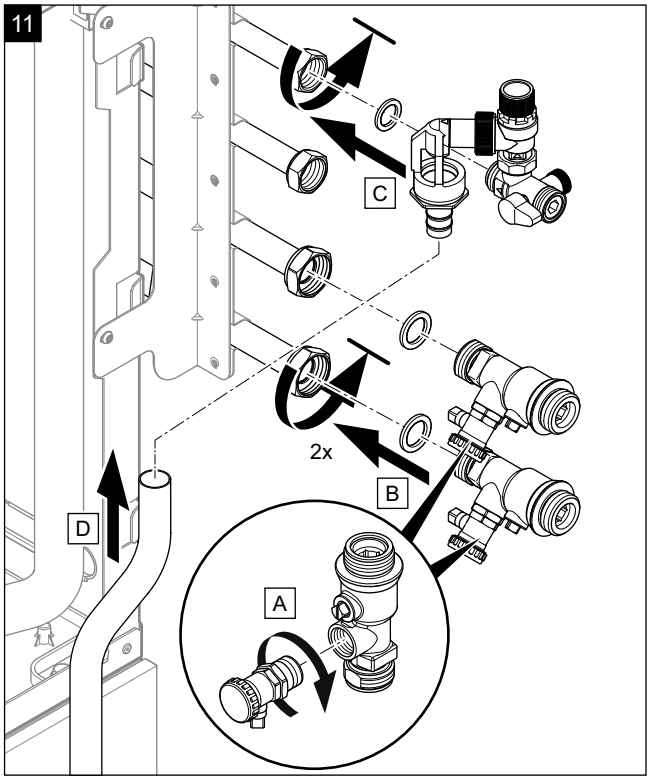

12

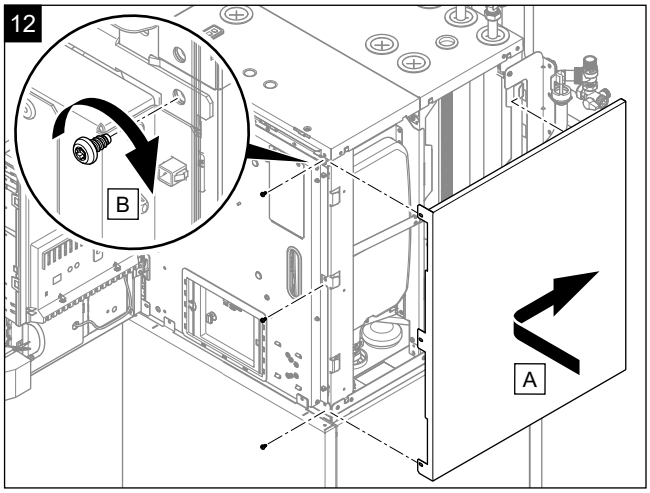

13

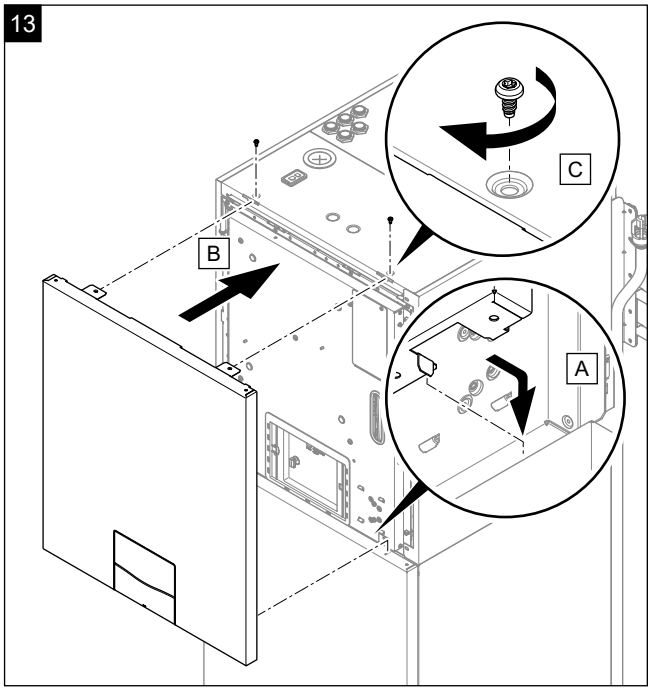

14

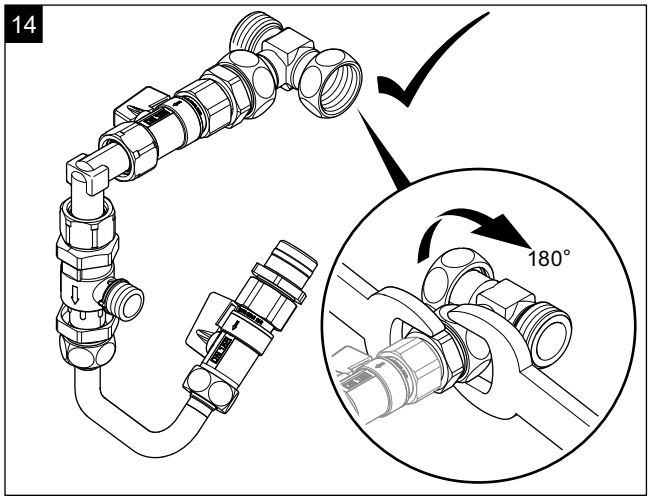

15

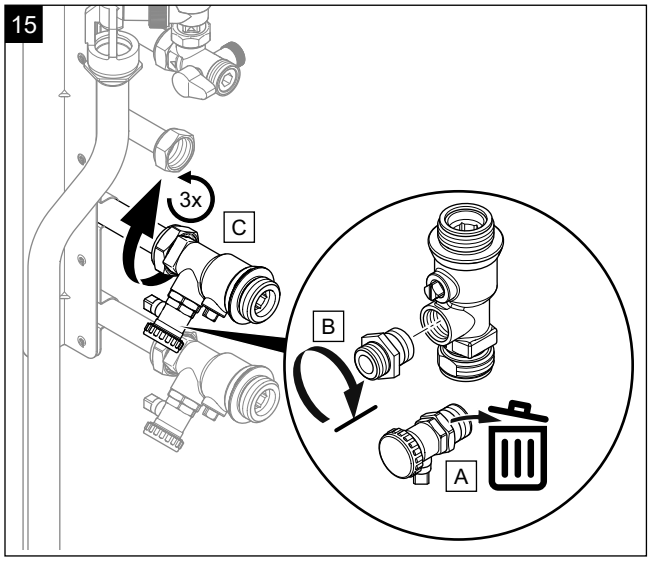

16

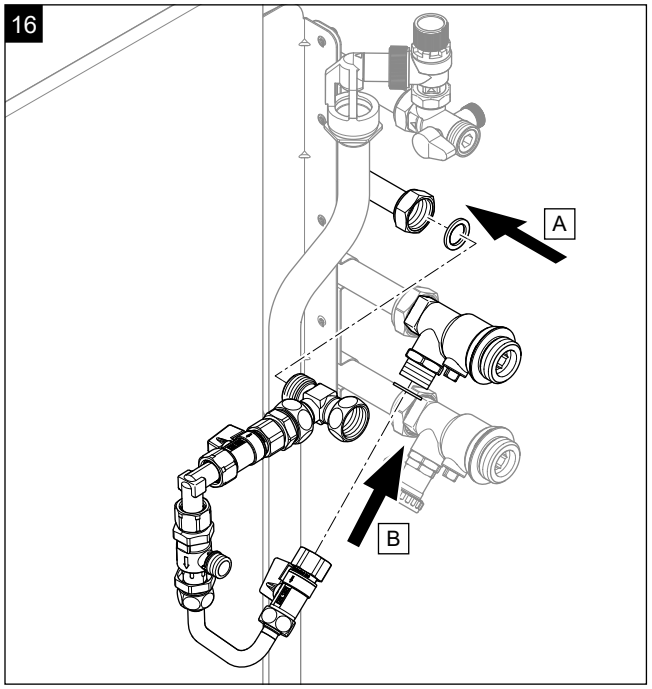

17

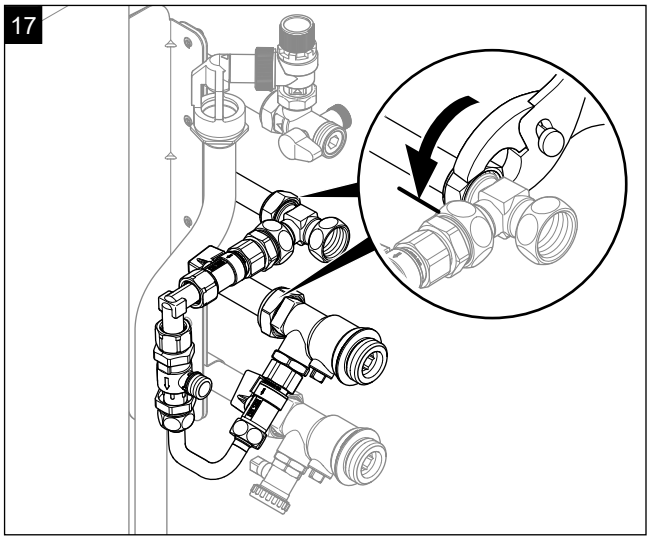

18

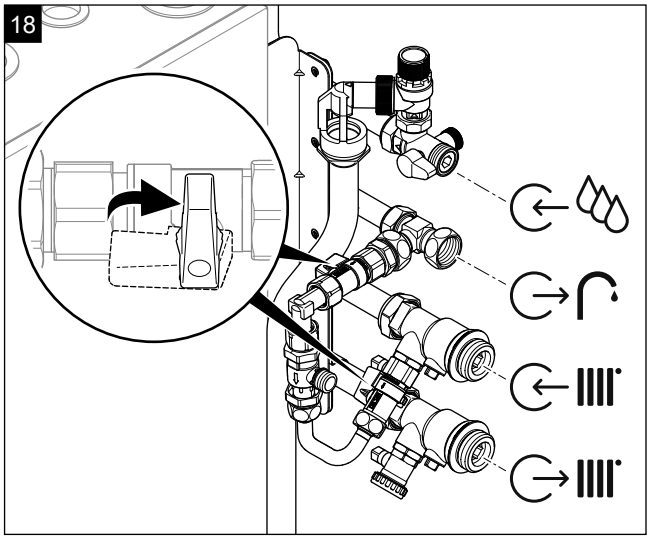

19

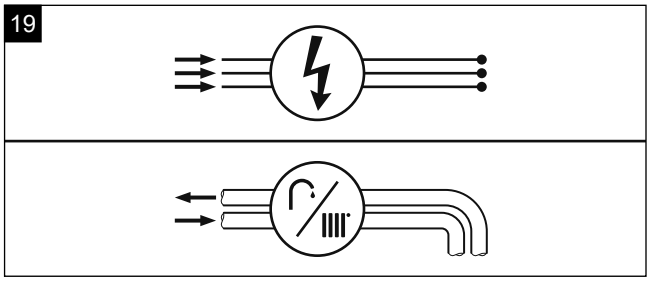

20

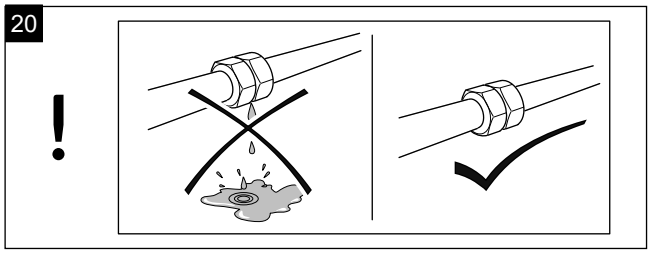

Manufacturer
Vaillant GmbH
Berghauser Str.40 D-42859 Remscheid
Telefon 021 91 18-0 Telefax 021 91 18-28 10

0020324338_01 ▪ 052022 - Subject to technical modifications.