sanifirst

SANITARYWARE | HEALTHCARE
LABORATORIES | DISABLED



TECHNICAL DATASHEET

ROBINETTERIE SANTÉ

Hospital washbasin mixer, fixed or swivel tube spout, without drain - 75062



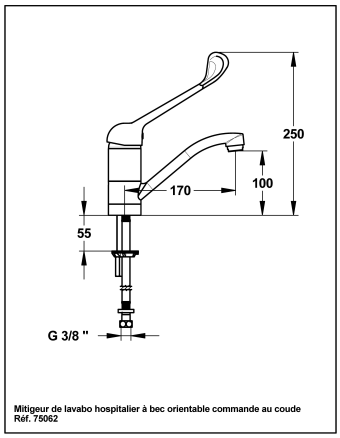

Les plus produit

- Ergonomic: easy to use elbow handle (for patients and technical staff)
- Hand hygiene: avoiding manual contact
- Fixed or swivel spout (optional)
- Multifunction ceramic cartridge: 7-setting temperature limit stop, dual flow (6/12L) and flow settings from 2l to 13.8l/min.
- Water savings, safe operation and controlled water consumption.

Description produit

Modul'mix design single hole washbasin mixer without drain for hand wash basin, deck-mount with 157mm long medical handle avoiding manual contact, using elbow, forearm or wrist. Swivel or fixed spout L 170mm. Height to nozzle 100mm. Multifunction ceramic cartridge Ø 40: 7-setting temperature limit stop, dual flow and flow settings from 2l to 13.8l/min. Tapware fitted as standard star-shaped flow straightener. Smooth body, spout and controls in polished chrome plated brass. SPEX stainless steel braided hoses, M10x1 LN G'3 / 8 L 350mm Reinforced fixation by a stainless steel rod. 10 year warranty. Sanifirst brand single hole washbasin mixer, swivel or fixed spout REF: 75062 or approved equivalent.

sanifirst

SANITARYWARE | HEALTHCARE
LABORATORIES | DISABLED



TECHNICAL DATASHEET

Caractéristiques détaillées

Référence produit	75062
Ancienne référence	FL2407MC
Marque	SaniFirst
Garantie	10 years against manufacturing defects
Spécificité 1	Bec orientable
Spécificité 2	Bec fixe
Hauteur sous bec (mm)	100
Saillie (mm)	170
Sens de commande	Vertical
Longueur commande	157
Hauteur commande (mm)	210
Décliptable	No
Type vidage	Sans vidage
Type brise jet	Star shaped flow straightener, M24 x 1
Organe de commande	Elbow / forearm / wrist handle
Référence manette	FL0012AA
Raccordement	SPEX stainless steel braided hoses, M10x1 LN G'3 / 8 L 350mm
Débit	Adjustable from 2 to 13.2l / min.
Pression mini	1 bar
Pression Conseillée	3 bar
Pression maxi	5 bar
Serrage maxi	40
Type cartouche	75312 Ø 40mm, dual flow, flow limiter and temperature limiter
Revêtement	Nickel > 10 microns - Chrome > 0.3 microns