Ventilation terminal kit

11033048
EasyHOME HYGRO COMPACT Classic unit

The EasyHOME HYGRO COMPACT Classic multi-position ventilation solution automatically adapts to needs by detecting the humidity level in each room.





PRODUCT BENEFITS

- up to €200 savings on heating bills,
- extra flat for easy installation in the dwelling,
- 77% recycled plastic.

REGULATIONS AND COMPLIANCES

Identification no. QB37 : 70/01-CHY5-2266
Technical Opinion no. : 14.5/17-2266

Principles of operation

EasyHOME HYGRO renews the air throughout your dwelling and removes ambient humidity.
In each room, the humidity-controlled air inlets and terminals detect humidity or occupation, to ensure the ventilation airflow is automatically adjusted to suit your needs.

Product description

EasyHOME HYGRO COMPACT Classic is a humidity-controlled unidirectional ventilation solution which adapts the air renewal rate to the humidity level or the presence of occupants in the dwelling, thereby preventing pointless heat losses.
The rate is controlled room by room by the humidity-controlled air inlets and terminals.
EasyHOME HYGRO COMPACT is compatible with multiple ducting solutions and can be installed with Optiflex semi-rigid ducts for an airtight, high-performance installation.
Ultra-flat and multi-position, EasyHOME HYGRO COMPACT is suitable for installation in small interior spaces, for example in a suspended ceiling or utility room.

Fields of application

Multi-occupancy residential housing, Individual residential housing, New, Refurbishment

Installation

- multi-position installation: wall, ceiling, floor, sloped surface,
- just 2 attachment screws: centreline 406 mm,
- built-in anti-vibration strips,
- quick-connect electrical terminal block,
- compatible with all types of ducting:

- Algaine flexible ducts,
- Optiflex semi-rigid ducts,
- Minigaine rigid ducts,
- ducting must be insulated outside of heated spaces,

- EasyCLIP Algaine accessories supplied: quick-fit connectors and collar clamps for simplified connection of flexible ducts to unit,
- EasyCLIP Optiflex accessories available as optional extras,
- Kitchen PUSH and WC PRES terminals powered by 9V alkaline battery (LR61), not supplied).

Reference arguments

- Application:

- Individual residential or apartment,
- Unidirectional ventilation systems,
- Refurbishment,
- New system or replacement of existing ventilation system,
- Connects 1 kitchen and up to 4 bathrooms/WC.

- Description:

- COMPACT unit made of recyclable plastic material: -1 x Ø125 connection for kitchen, 4 x Ø80 connections for bathrooms/WC, 1 x Ø160 outlet,
- Exhaust airflows controlled by humidity-controlled terminals according to ambient humidity,
- 1-speed AC motor.

We reserve the right to make changes without notice

Ventilation terminal kit

11033048
EasyHOME HYGRO COMPACT Classic unit

Main characteristics

- COMPACT unit made of recyclable plastic,
- connections on unit for 1 kitchen and up to 4 bathrooms/WC:
- 1 x Ø 125 mm connection for kitchen,
- 4 x Ø 80 mm connections for bathrooms/WC,
- 1 x Ø 160 mm outlet.
- exhaust airflow controlled by humidity-controlled terminals according to ambient humidity or occupancy,
- installation symbols on the unit,
- 2 operating modes: HYGRO humidity-controlled mode and BOOST mode for kitchen,
- 1-speed AC motor,
- Hygro B kits supplied with Bahia Curve humidity-controlled terminals, electrical control (ELEC).

Supplementary characteristics

- HYGRO mode:
- continuously variable daily automatic operation,
- ventilation airflow reduced to minimum during periods of absence,
- airflow increased at terminals when humidity level rises (perspiration, shower, cooking, etc.) or when occupancy of the WC is detected.
- BOOST kitchen mode:
- high speed ventilation in kitchen by opening terminal at peak airflow for a period of 30 min,
- manual activation of peak airflow by push button (ELEC terminal),
- fast elimination of humidity and odours at meal times.

Contents of kits

- Plug Ø 80 mm; 2

Accessories

Description	Variants
Collar + connector EasyCLIP Ø125 mm	11033010
Collar + connector EasyCLIP Ø80 mm	11033011
Connector EasyCLIP + collar Ø 160 mm	11033016
CMEV push button for BAHIA CURVE terminal	11026011
Trident sleeve Ø 125 mm	11033007
Trident sleeve Ø80	11022074

General data

Variants	Number of connections Ø 125 mm	Number of connections Ø 80 mm	Maximum number of bathrooms/ WC	Number of speeds	Motor Type
11033048	1	4	4	1	AC

Dimensional data

Variants	H (mm)	L (mm)	P (mm)	Ø discharge (mm)	Weight (kg)
11033048	187	459	460	160	3,6

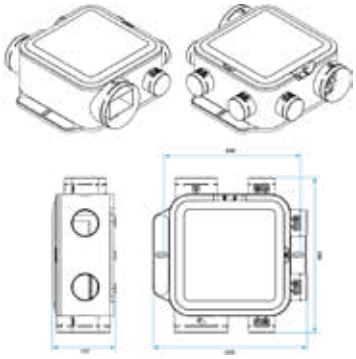

Airflow data

Variants	Max. airflow ErP (m³/h)
11033048	221

We reserve the right to make changes without notice

Ventilation terminal kit

11033048
EasyHOME HYGRO COMPACT Classic unit

Acoustic data

Variants	Sound pressure at 2 m from the kitchen terminal (dB(A))	Sound power at kitchen terminal (dB(A))	Sound power at the unit at 100 m3/h (dB(A))	Sound power ErP (dB(A))
11033048	20	37	46	46

Heat recovery data

Variants	Average daily consumption 2–bed dwelling (1 bathroom + 1 WC) (W)
11033048	20.7

Electrical datas

Variants	Voltage (V)	Frequency (Hz)	Max. power	Max. current (A)	Protection current (A)
11033048	230	50	28	0,2	2

Installation



Montage faux-plafond

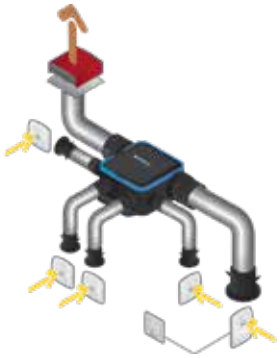

Installation avec conduits souples Algaine isolée

Installation avec conduits rigides Minigaine

Installation avec conduits semi-rigides Optiflex

Curve

We reserve the right to make changes without notice