CONTENT

Augmented Reality (AR) - Digital meets real 2

3D preview of VBI61 3

Integrate Siemens Building Technologies EUROPEAN Portfolio catalog inside your CAD System 4

2D derivations and Bill-Of-Material (BOM) 5

Technical drawings 6

Technical data 7

Get a free E-Learning training for Siemens Building Technologies EUROPEAN Portfolio catalog 8

www.CADENAS.de
www.3Dfindit.com

VISIT US AT 3Dfindit.com NOW!

VBI61

AR

Augmented Reality, often shortened to AR, is a technology that blends digital information into the real world.
For more information, please click here or directly try yourself by scanning the QR code with your phone.

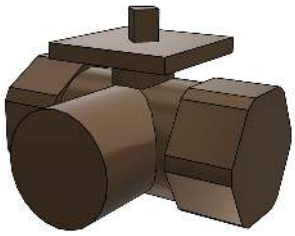



SCAN ME

Supported by

Supported by

Please scan the QR code above and open on AR-enabled device.
There is a possibility that the configuration will fail. If that happens, please try a different product.

VBI61

3D view

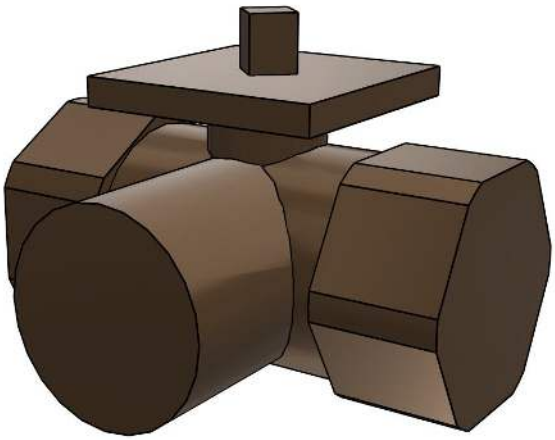

HOW TO ACTIVATE 3D?

To activate the interactive 3D view in Acrobat Reader, you need to select, at the top of the page, **Options** and then **Trust this document**

Zoom

Moves you toward or away from objects in the scene when you drag vertically. You can also zoom with the hand tool by holding down Shift as you drag.

Pan

Moves the model vertically and horizontally only. You can also pan with the hand tool: Ctrl-drag.

Rotate

Turns 3D objects around relative to the screen. How the objects move depends on the starting view, where you start dragging and the direction in which you drag.

CAD plugins

With our CAD integrations, you can use 3Dfindit directly in your CAD system and make your work easier with additional comfort functions, such as replacing a part and many more.

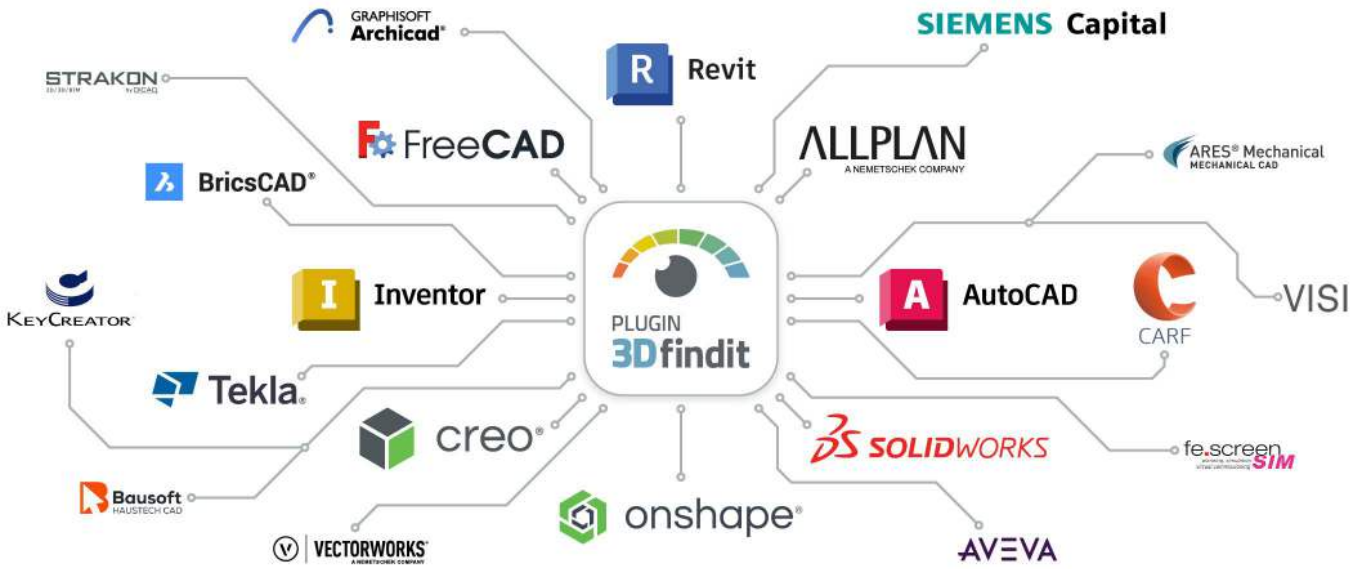

To the plugins

VBI61

2D derivation

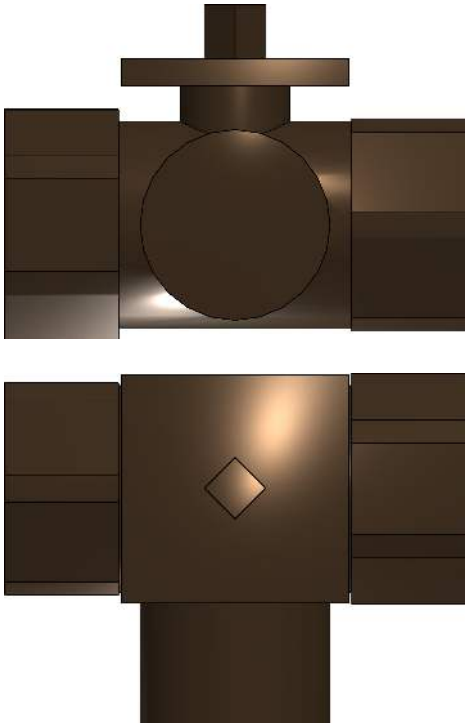

ISO view

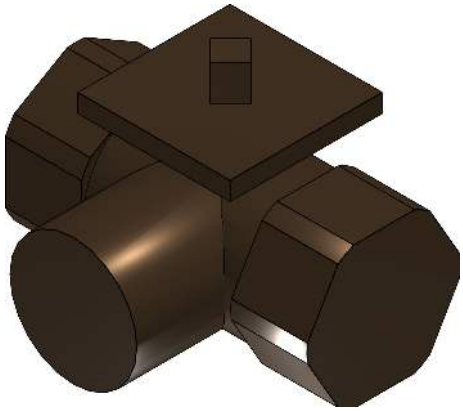

Bill-Of-Materials

N°	Description	Amount
1.1	VBI61.25-10 Kugelhahn 3-W DN25 kvs10	1

Technical drawings

VBI61

Technical data

SA010ID04 (Manufacturer's name)	Siemens Building Technologies EUROPEAN Portfolio
SA700ID26 (Product description)	VBI61.25-10 Ballvalve 3-Port DN25 kvs10
SA110ID05 (Main product group)	VBI61.25-10
PREVIEW (Preview)	../../_pool_/8a/f3/vbi612e252c3-weg-kugelhaehne.png
LODLEVEL (Level of detail)	Low
SA700ID04 (Valve assembly type)	shut-off and control valve assemblies
SA700ID28 (nominal dimension)	25
SA700ID06 (kvs value / m³/h)	10
SA700ID30 (Nominal pressure PN)	40
SA71012ID04 (Length / mm)	85
SA71012ID05 (Width / mm)	64.5
SA71012ID06 (Height / mm)	61.8
SA71012ID08 (mass (net) / kg)	0.6
SA700ID07 (Maximum operating temperature / °C)	120
SA700ID08 (Maximum operating pressure / bar)	16
SA400ID03 (Body material)	brass
LINK ()	http://www.siemens.com/btproduct?BPZ:VBI61.25-10
SA810ID03 (Manufacturer order number)	BPZ:VBI61.25-10
SA810ID04 (Datanorm number)	BPZ:VBI61.25-10
SA810ID06 (GTIN number)	7612914074379
SA810ID10 (Description text)	3-port ball valve, internal thread, PN40, DN25, kvs 10
SA810ID14 (Units of quantity)	PCE
SA810ID15 (Quantity per packaging unit)	1
SA010ID06 (Manufacturer's web address)	http://www.siemens.com/buildingtechnologies
SUPPORTLINK (Supportlink)	https://support.industry.siemens.com/cs/ww/en/ps/25261
SA010ID12 (Status of the manufacturer's catalog)	20210514
ETIMCLASSC (ETIM Classcode)	EC011540
ETIMCLASSN (ETIM Classname)	Three way ball valve
IFCEXPORT (IfcExportAs)	IfcValve.CHANGEOVER
OMNICLASSNU (OmniClass number)	23-27 31 15
OMNICLASS (OmniClass title)	Ball Valves
UNICLASSC (Uniclass code)	Pr_65_54_95_06
SA010ID02 (Blattnummer der Richtlinie)	2
SA010ID03 (Date of issue (month) of the standard)	200111
INFO (Information about export to accessory combination)	When selecting accessory combination, please select export format "Autodesk Revit Instance+Family 20XX (3D)"!
ACCESSORY_1 (Accessories: Antriebe)	-

E-Learning

Discover free training for 3Dfindit, the search engine for engineers, designers, and architects. Our 30 to 50-minute interactive courses provide you with comprehensive knowledge about the platform. Upon successful completion, you will receive a certificate. Start your first course now and master 3Dfindit!



Learn more

Start course