Brand	hansgrohe
Art. Name	**Vernis Blend** Showerpipe 240 1jet EcoSmart with thermostat
Art. Nr.	26428670
Surface	Matt Black

Product picture

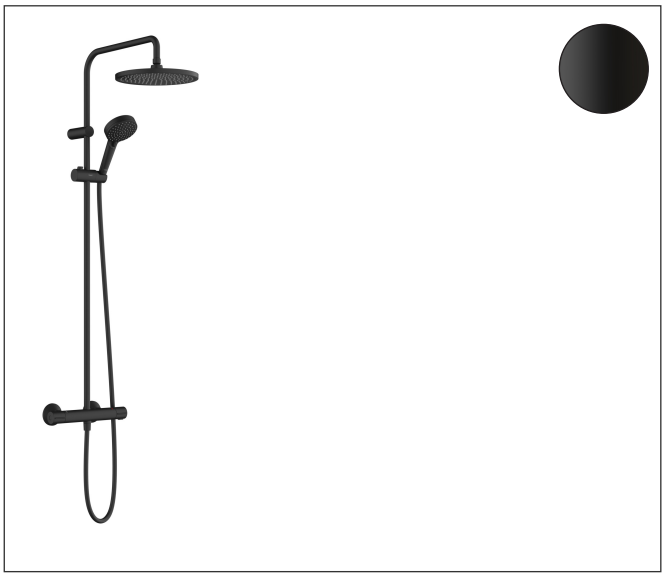

Drawing

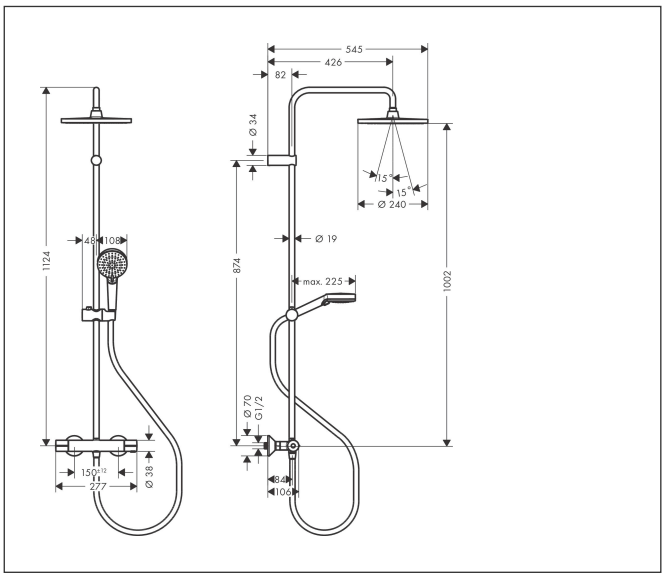

Features

- consists of: overhead shower, hand shower, shower thermostat, shower hose, shower bar, slider
- overhead shower Crometta S 240
- shower head size overhead shower: 240 mm
- ball-joint: overhead shower angle adjustable
- QuickClean: Limescale deposits can simply be rubbed off with your finger
- removable shower head
- spray type overhead shower: Rain
- flow rate Rain spray at 3 bar: 6,5 l/min
- spray type hand shower: Rain, IntenseRain
- maximum flow rate of hand shower at 3 bar: 6,9 l/min
- function from: 4,9 l/min
- maximum flow rate for Showerpipe at 3 bar: 6,9 l/min
- minimum flow pressure: 1 bar
- max. operating pressure: 10 bar
- height-adjustable slider with locking push-button
- shower arm length overhead shower: 426 mm
- thermostat Vernis
- safety stop at 40°C
- adjustable hot water limitation
- outlets controlled via turning handle
- suitable for continuous flow water heaters
- mounting type: exposed installation
- connection dimension: DN15

Technology



Spray Types



Brand	hansgrohe
Art. Name	**Vernis Blend** Showerpipe 240 1jet EcoSmart with thermostat
Art. Nr.	26428670
Surface	Matt Black

Flow chart

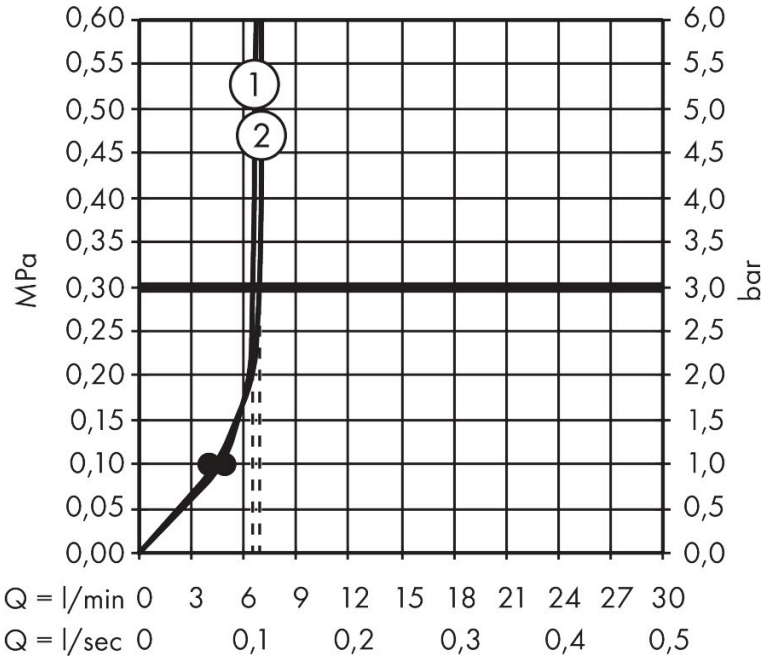

1 Overhead shower
2 Hand shower

The consumption was measured in combination with the appropriate fittings (thermostat/mixer/in-wall valve) to reflect actual application in practice.

Brand	hansgrohe
Art. Name	**Vernis Blend** Showerpipe 240 1jet EcoSmart with thermostat
Art. Nr.	26428670
Surface	Matt Black

Installation examples

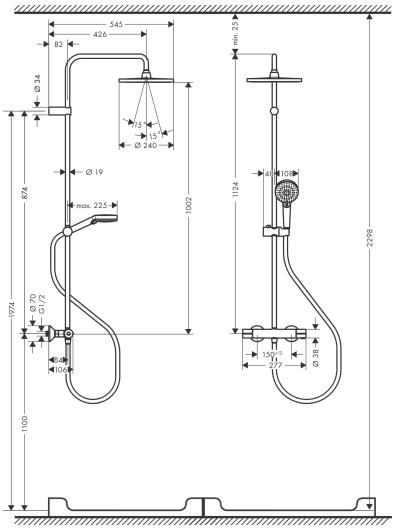

Dimensions may vary due to ceramic tolerances related to the production process.

Brand	hansgrohe
Art. Name	**Vernis Blend** Showerpipe 240 1jet EcoSmart with thermostat
Art. Nr.	26428670
Surface	Matt Black

Spare Parts Drawing for build year: > 10/22

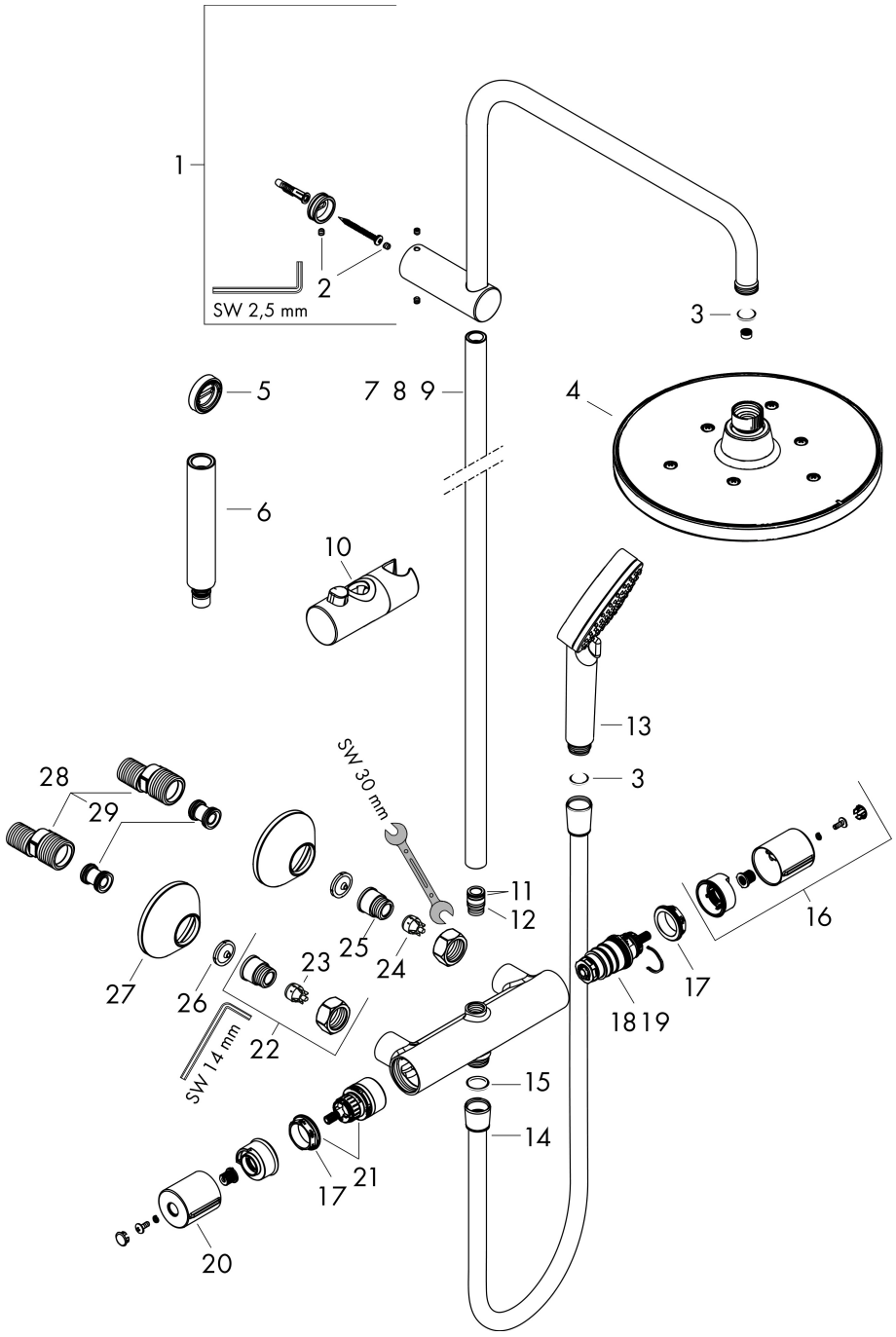

Brand	hansgrohe
Art. Name	**Vernis Blend** Showerpipe 240 1jet EcoSmart with thermostat
Art. Nr.	26428670
Surface	Matt Black

Spare parts list for build year: > 10/22

Pos.	Description	Articlenumber
1	shower arm	93768670
2	hollow set screw M5x5	98446000
3	filter packing	94246000
4	head shower	26724670
5	tile-matching-disk 7 mm	93813670
6	extension 100 mm	94164670
7	pipe 845 mm	93906670
8	pipe 945 mm	93770670
9	pipe 1145 mm	93907670
10	support, assy	93729670
11	O-ring 12x2	98214000
12	O-ring 11x2	98127000
13	handshower	26340670
14	shower hose Isiflex'B 1,60 m	28276670
15	seal	98058000
16	handle for thermostat	93727670
17	nut	98913000
18	thermostat cartridge	98282000
19	cartridge for exchanged connections	92373000
20	handle	93731670
21	shut off unit with selector	98283000
22	connecting thread G½	93730670
23	non return valve (pressure-resistant up to 2 MPa)	93136000
24	non return valve	96737000
25	O-ring 16x2	98133000
26	filter packing	96922000
27	escutcheon Ø 70 mm	93718670
28	set of S-unions (±12 mm)	94140000
29	noise reduction	96429000