Company name:
Created by:
Phone:

Date: 14/05/2024

Qty.	Description
1	**MAGNA1 D 32-80**



Note! Product picture may differ from actual product

Product No.: 99221240

The Grundfos MAGNA1 D circulator pump is the simple option for a job well done.
With its high energy efficiency the product lives up to the EuP 2015 regulations ensuring substantial savings on electricity, and with its intuitive, user-friendly interface and maintenance-free design, MAGNA1 D is the ideal circulator pump for basic performance needs in applications where basic system control and monitoring are desired.

With this range of circulator pumps, everything from setup to basic control and monitoring are made easy. The pump is maintenance-free due to the canned-rotor type design.

MAGNA1 D offers peace of mind due to the security of supply obtained by having a redundant pump, resulting in improved uptime. The flow, and thereby constant comfort, is secured because of its ability to automatically switch between pump heads if one breaks down. The two pumps communicate wirelessly.

MAGNA1 D offers the possibility of monitoring the pump via the fault relay output. The digital start/stop input remotely controls the pump. The pump communicates wirelessly with the Grundfos GO Remote app and can also communicate via radio.

MAGNA1 D can work as main pump in both heating and cooling applications, including:

- Mixing loops
- Heating surfaces
- Air-conditioning surfaces
- Ground-source heat pump systems
- Smaller chiller applications.

MAGNA1 D is a single-phase pump and characterised by having the controller and operating panel integrated in the control box.

The pump housing is available in both cast-iron and stainless-steel versions.

The composite rotor can is carbon-fibre reinforced, the bearing plate and rotor cladding are made of stainless steel and the stator housing is made of aluminium.

The power electronics are air-cooled.

The pump incorporates a 4-pole synchronous, permanent-magnet motor (PM motor). This motor type is characterised by higher efficiency than a conventional asynchronous squirrel-cage motor. The pump speed is controlled by an integrated frequency converter.

Company name:
Created by:
Phone:

Date: 14/05/2024

Description	Value
General information:	
Product name:	MAGNA1 D 32-80
Product No:	99221240
EAN number:	5712608942136
Technical:	
Maximum head:	80 dm
TF class:	110
Approvals:	CE,VDE,EAC,MOROCCO,UKCA, TSE,RCM,UkrSEPRO
Model:	C
Materials:	
Pump housing:	Cast iron
Pump housing:	EN 1561 EN-GJL-200
Pump housing:	ASTM A48-200B
Impeller:	Composite
Installation:	
Range of ambient temperature:	0 .. 40 °C
Maximum operating pressure:	10 bar
Type of connection:	G
Size of connection:	2 inch
Pressure rating for connection:	PN 10
Port-to-port length:	180 mm
Liquid:	
Pumped liquid:	Water
Liquid temperature range:	-10 .. 110 °C
Selected liquid temperature:	60 °C
Density:	983.2 kg/m³
Electrical data:	
Maximum power input - P1:	151 W
P1 min.:	9 W
Mains frequency:	50 / 60 Hz
Rated voltage:	1 x 230 V
Minimum current consumption:	0.09 A
Maximum current consumption:	1.22 A
Enclosure class (IEC 34-5):	X4D
Insulation class (IEC 85):	F
Others:	
Energy (EEI):	0.23
Net weight:	11.1 kg
Gross weight:	12.8 kg
Shipping volume:	0.046 m³
Country of origin:	DE
Custom tariff no.:	84137030
Environmental approvals:	CN ROHS,WEEE

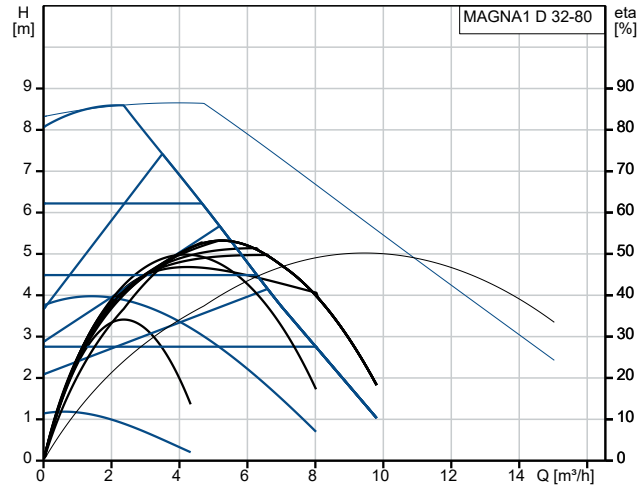

Pumped liquid = Water
Liquid temperature during operation = 60 °C
Density = 983.2 kg/m³

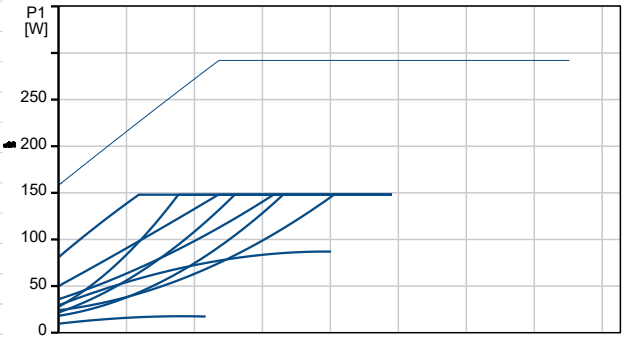

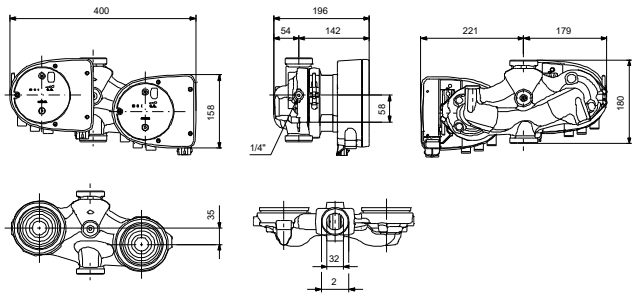

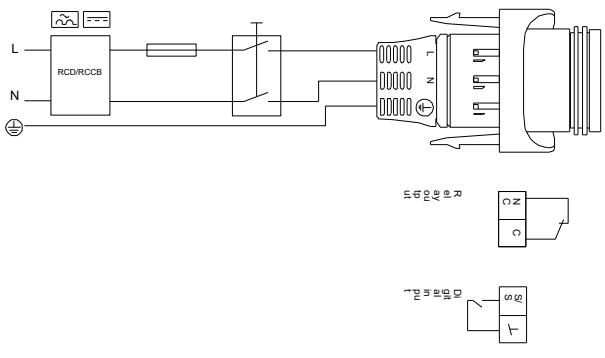

Company name:
Created by:
Phone:

Date: 14/05/2024

99221240 MAGNA1 D 32-80

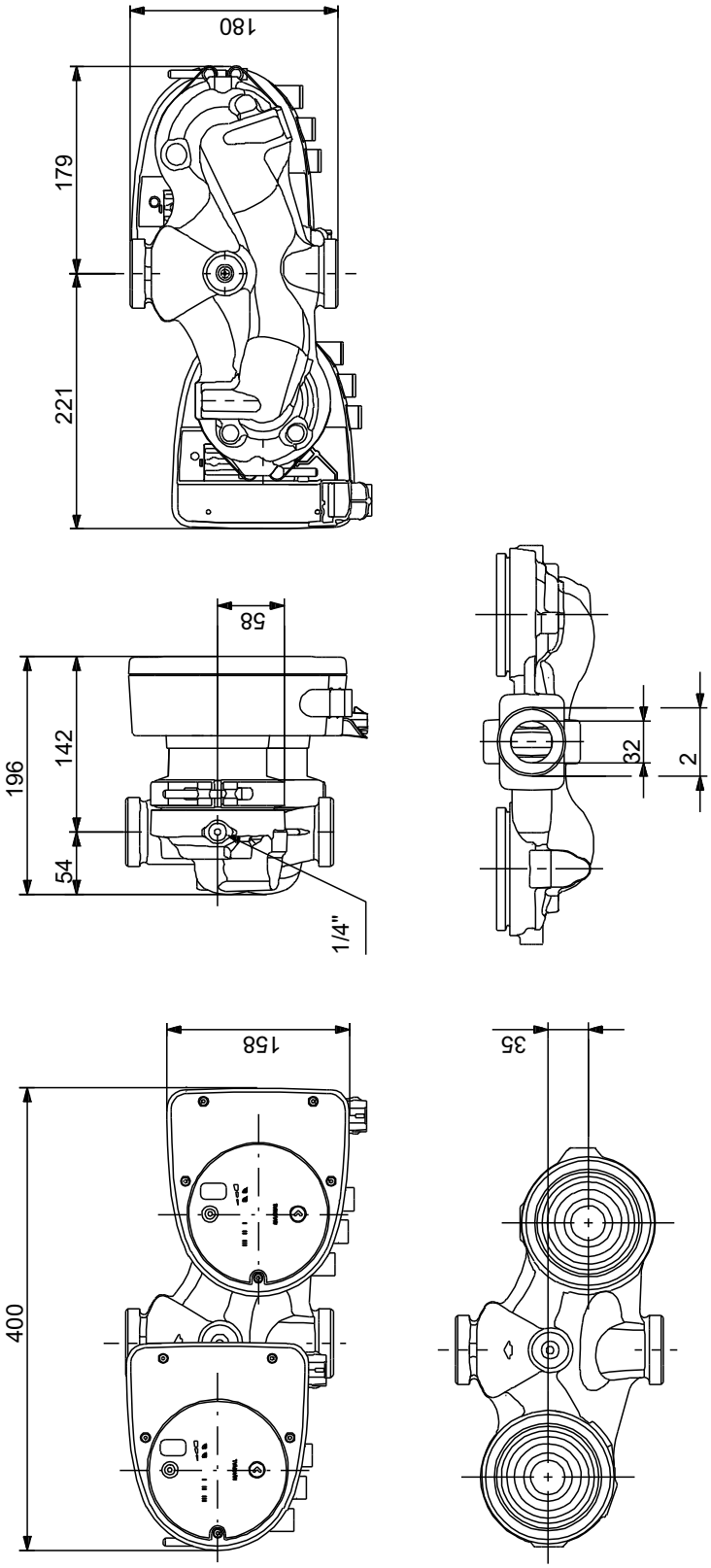

Note! All units are in [mm] unless others are stated.
Disclaimer: This simplified dimensional drawing does not show all details.