Company name:
Created by:
Phone:

Date: 13/06/2024

Qty.	Description
1	**MAGNA1 40-60 F**



Note! Product picture may differ from actual product

Product No.: 99221292

The Grundfos MAGNA1 circulator pump is the simple option for a job well done.
With its high energy efficiency the product lives up to the EuP 2015 regulations ensuring substantial savings on electricity, and with its intuitive, user-friendly interface and maintenance-free design, MAGNA1 is the ideal circulator pump for basic performance needs in applications where basic system control and monitoring are desired.

With this range of circulator pumps, everything from setup to basic control and monitoring are made easy. The pump is maintenance-free due to the canned-rotor type design.

MAGNA1 offers the possibility of monitoring the pump via the fault relay output. The digital start/stop input remotely controls the pump.

The pump communicates wirelessly with the Grundfos GO Remote app.

MAGNA1 can work as main pump in both heating and cooling applications, including:

- Mixing loops
- Heating surfaces
- Air-conditioning surfaces
- Ground-source heat pump systems
- Smaller chiller applications.

MAGNA1 is a single-phase pump and characterised by having the controller and operating panel integrated in the control box.

The pump housing is available in both cast-iron and stainless-steel versions.

The composite rotor can is carbon-fibre reinforced, the bearing plate and rotor cladding are made of stainless steel and the stator housing is made of aluminium.

The power electronics are air-cooled.

The pump incorporates a 4-pole synchronous, permanent-magnet motor (PM motor). This motor type is characterised by higher efficiency than a conventional asynchronous squirrel-cage motor. The pump speed is controlled by an integrated frequency converter.

Company name:
Created by:
Phone:

Date: 13/06/2024

99221292 MAGNA1 40-60 F

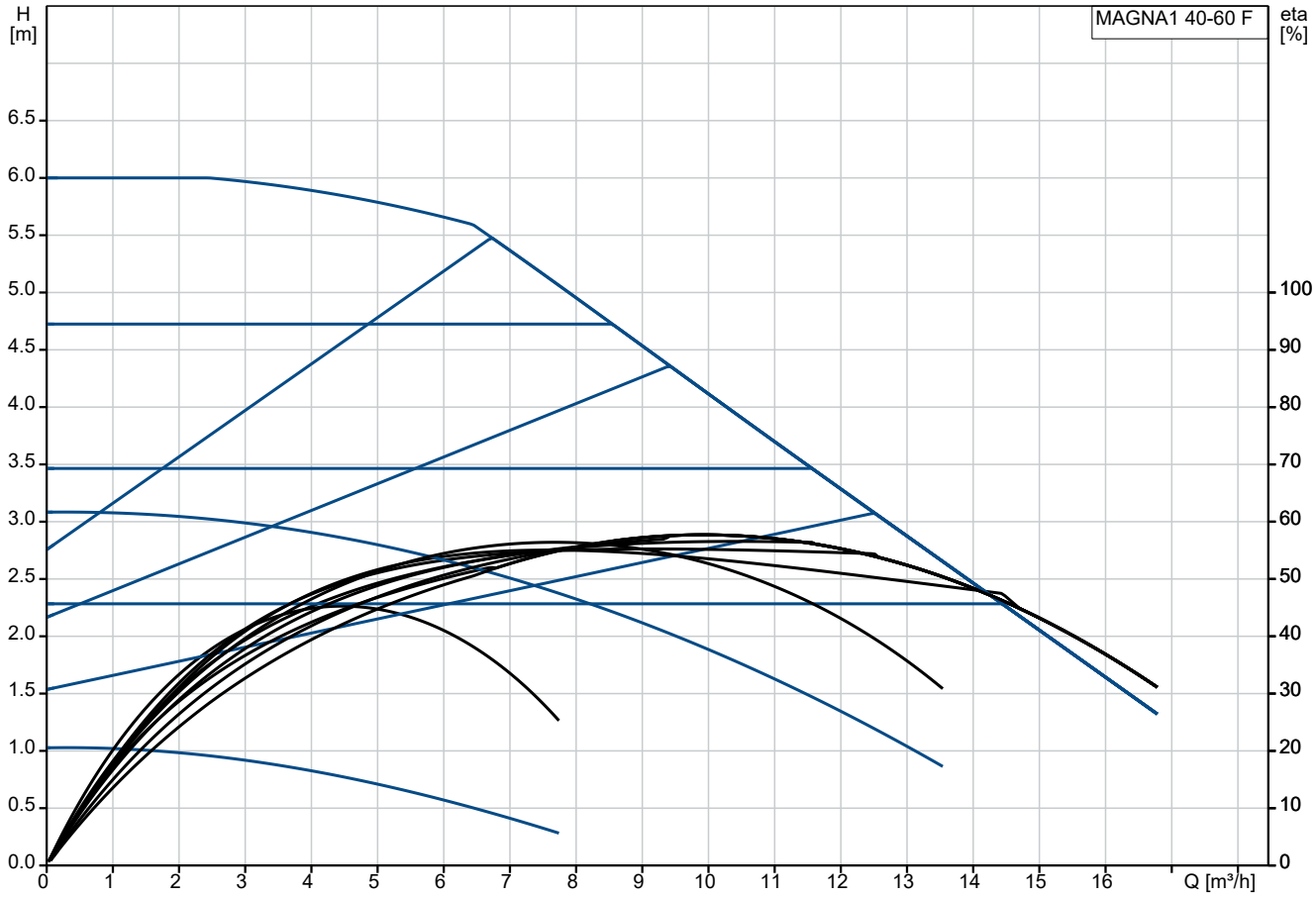

Pumped liquid = Water
Liquid temperature during operation = 60 °C
Density = 983.2 kg/m³

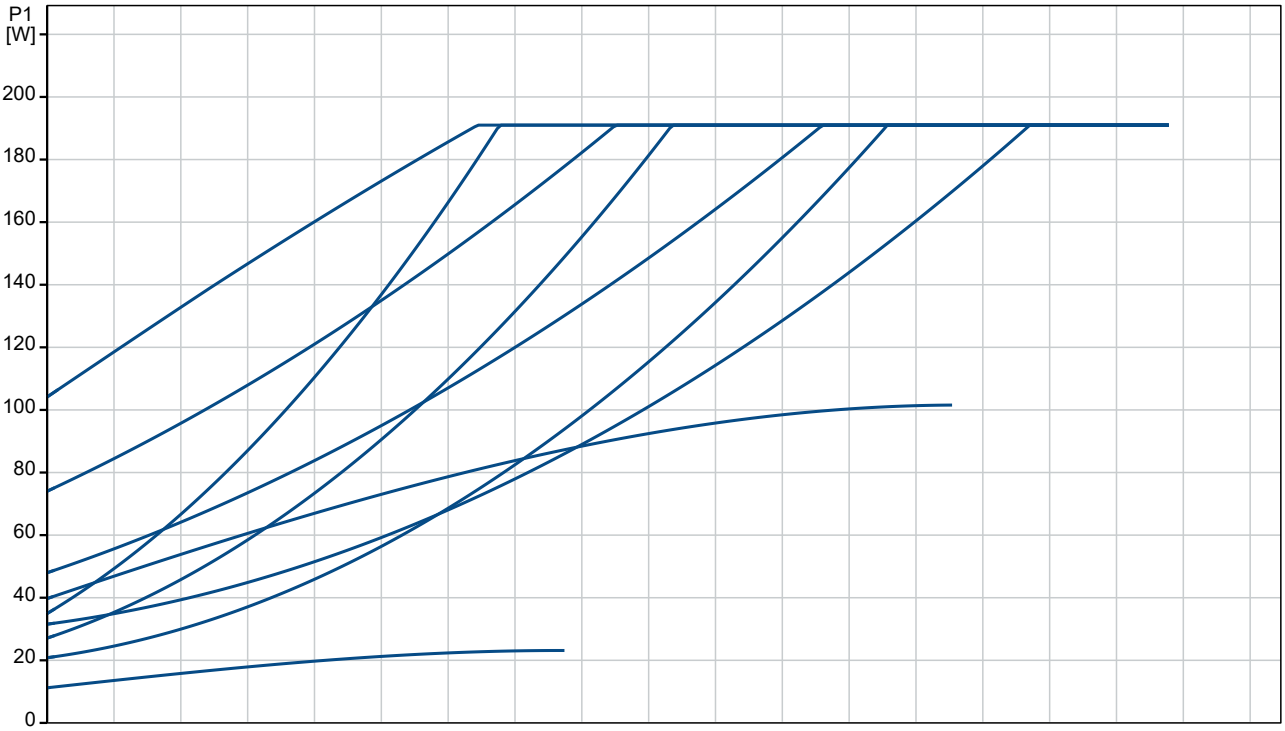

Company name:
Created by:
Phone:

Date: 13/06/2024

Description	Value
General information:	
Product name:	MAGNA1 40-60 F
Product No:	99221292
EAN number:	5712608942655
Price:	EUR 1404
Technical:	
Maximum head:	60 dm
TF class:	110
Approvals:	CE,VDE,EAC,MOROCCO,UKCA, TSE,RCM,UkrSEPRO
Model:	C
Materials:	
Pump housing:	Cast iron
Pump housing:	EN 1561 EN-GJL-250
Pump housing:	ASTM A48-250B
Impeller:	Composite
Installation:	
Range of ambient temperature:	0 .. 40 °C
Maximum operating pressure:	10 bar
Type of connection:	DIN
Size of connection:	DN 40
Pressure rating for connection:	PN 6/10
Port-to-port length:	220 mm
Liquid:	
Pumped liquid:	Water
Liquid temperature range:	-10 .. 110 °C
Selected liquid temperature:	60 °C
Density:	983.2 kg/m³
Electrical data:	
Maximum power input - P1:	194 W
P1 min.:	12 W
Mains frequency:	50 / 60 Hz
Rated voltage:	1 x 230 V
Minimum current consumption:	0.11 A
Maximum current consumption:	1.56 A
Enclosure class (IEC 34-5):	X4D
Insulation class (IEC 85):	F
Others:	
Energy (EEI):	0.20
Net weight:	9.57 kg
Gross weight:	10.2 kg
Shipping volume:	0.016 m³
Finnish LVI No.:	4615319
Country of origin:	DE
Custom tariff no.:	84137030
Environmental approvals:	CN ROHS,WEEE

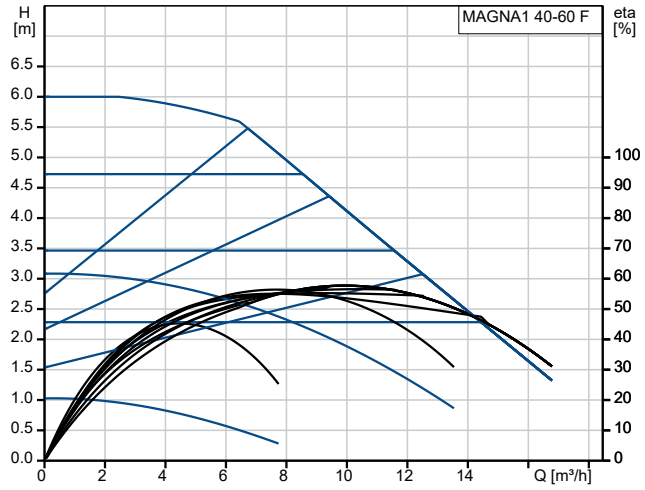

Pumped liquid = Water
Liquid temperature during operation = 60 °C
Density = 983.2 kg/m³

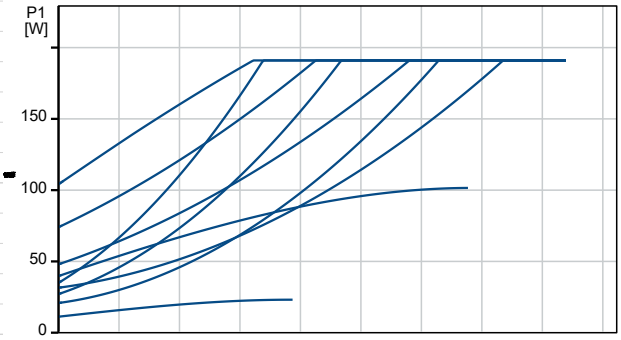

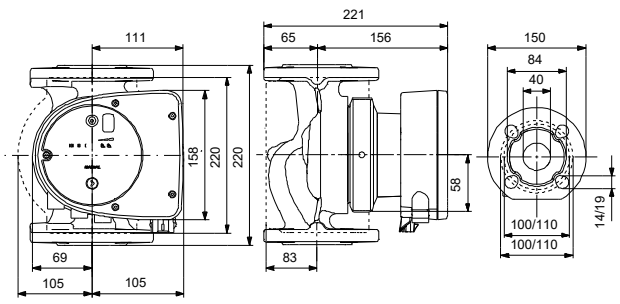

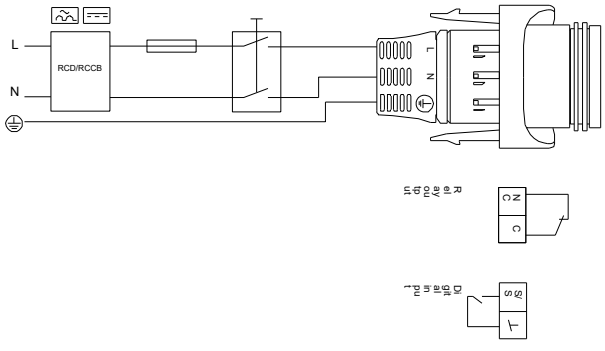

Company name:
Created by:
Phone:

Date: 13/06/2024

99221292 MAGNA1 40-60 F

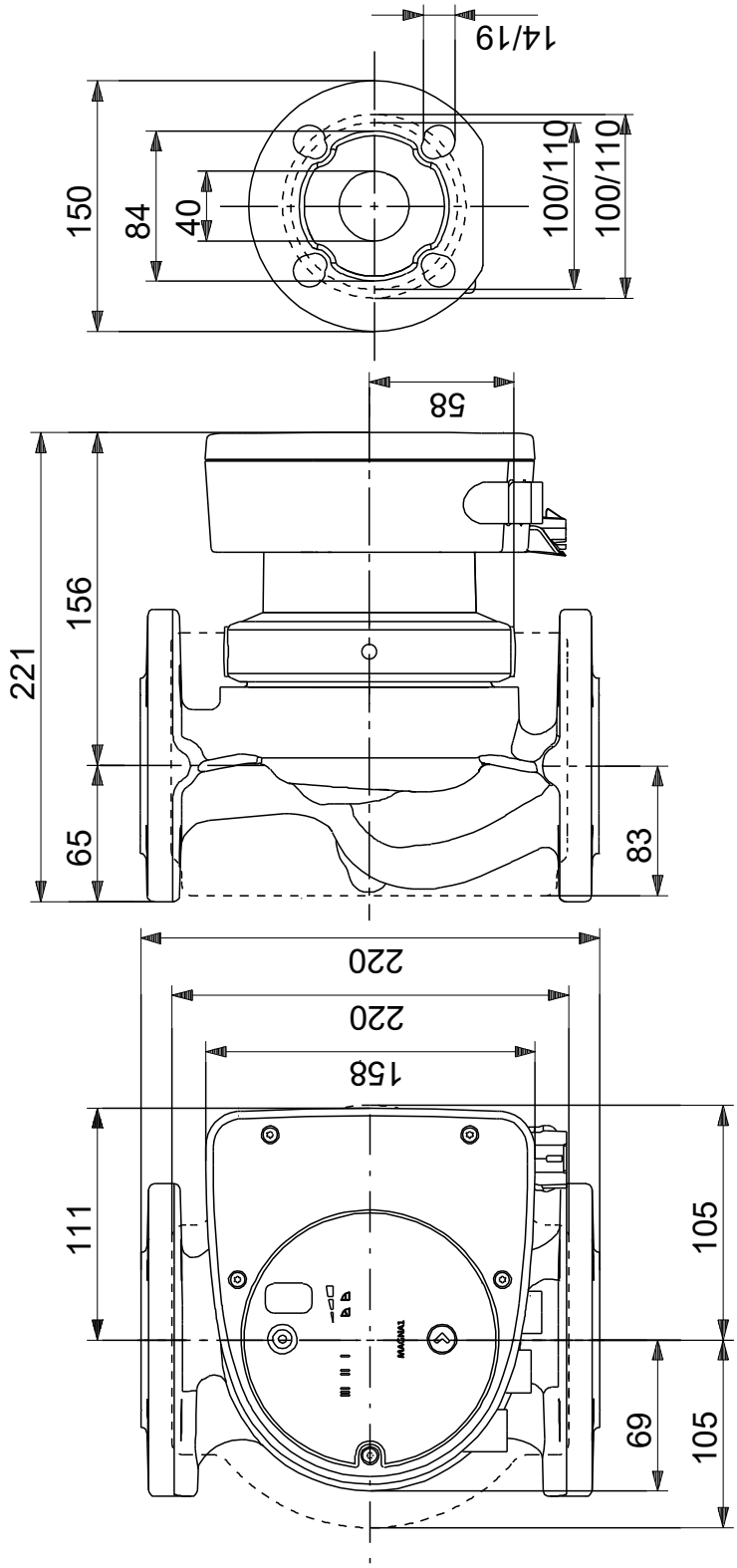

Note! All units are in [mm] unless others are stated.
Disclaimer: This simplified dimensional drawing does not show all details.

Company name:
Created by:
Phone:

Date: 13/06/2024

99221292 MAGNA1 40-60 F

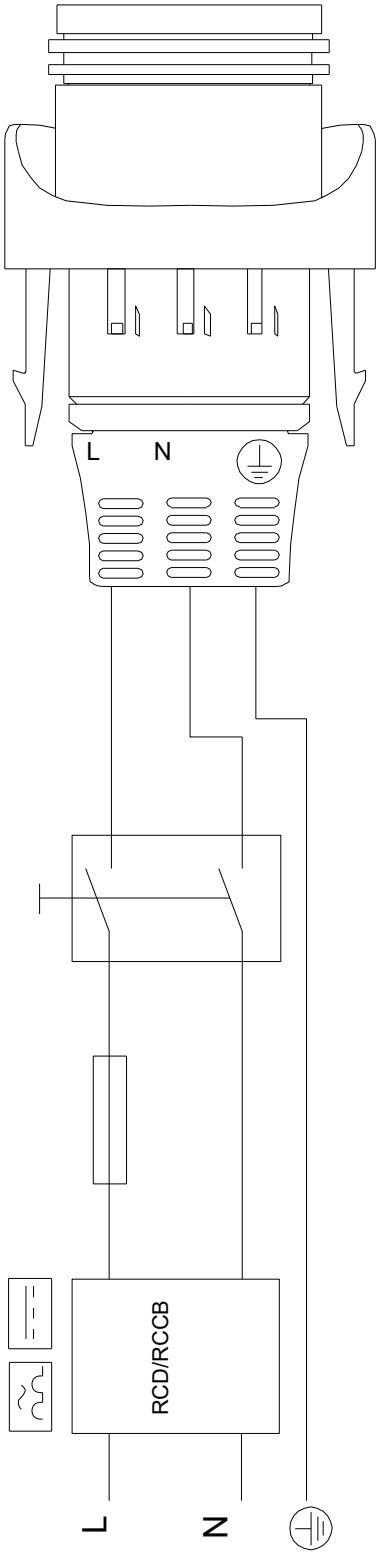

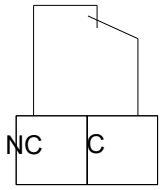

Relay output

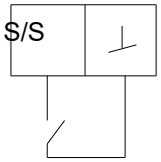

Digital input

Note! All units are in [mm] unless others are stated.